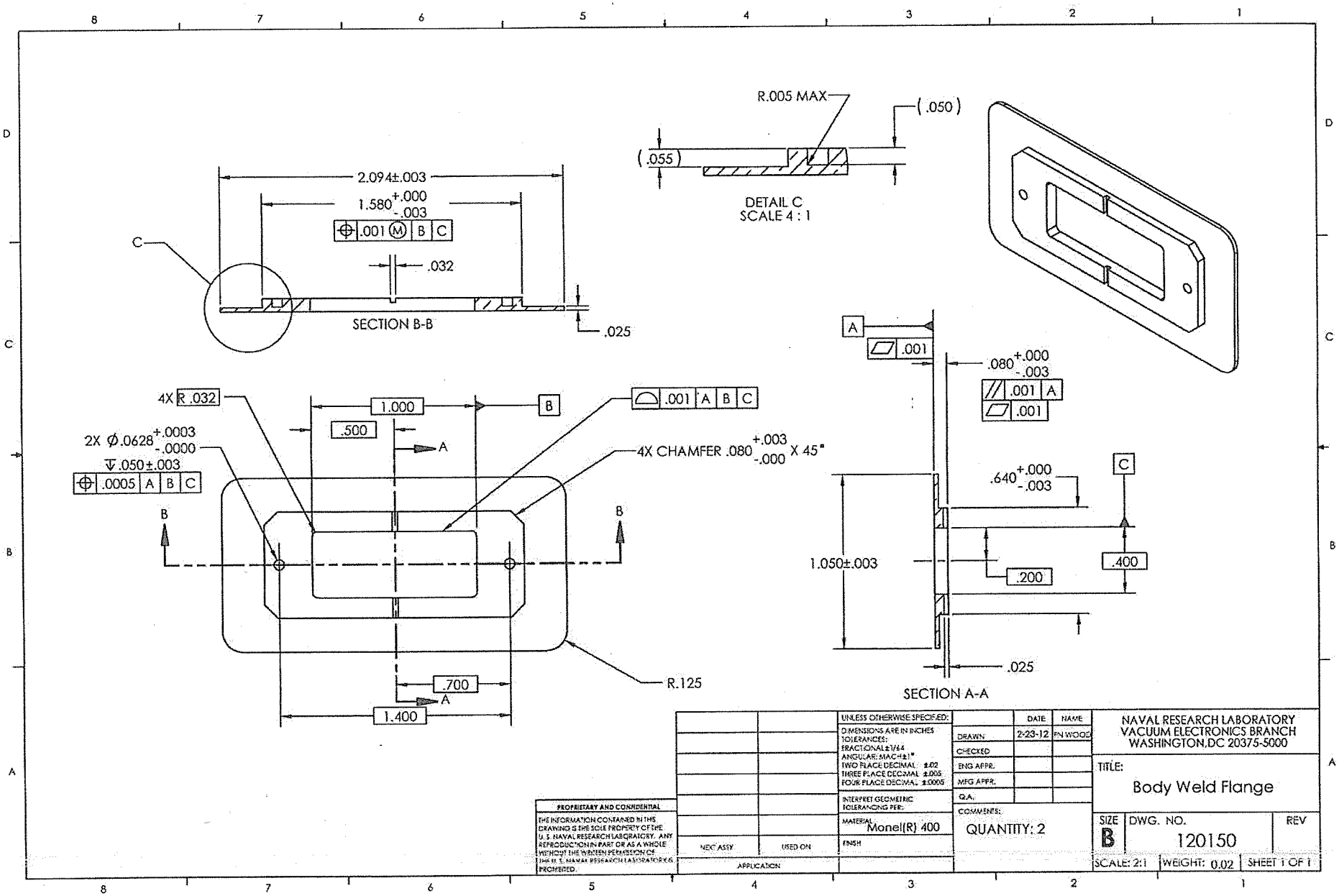
R.005 MAX
(.050)
(.055)
DETAIL C
SCALE 4 : 1
2.094±.003
1.580 +.000 -.003
.001 M B C
.032
C
SECTION B-B
.025
A
.001
.080 +.000 -.003
.001 A
.001
4X R.032
1.000
B
.001 A B C
.500
A
2X Ø.0628 +.0003 -.0000
↧.050±.003
.0005 A B C
4X CHAMFER .080 +.003 -.000 X 45°
B
B
.640 +.000 -.003
C
1.050±.003
.200
.400
.025
SECTION A-A
.700
A
R.125
1.400
UNLESS OTHERWISE SPECIFIED:
DIMENSIONS ARE IN INCHES
TOLERANCES:
FRACTIONAL ±1/64
ANGULAR: MACH ±1°
TWO PLACE DECIMAL ±.02
THREE PLACE DECIMAL ±.005
FOUR PLACE DECIMAL ±.0005
INTERPRET GEOMETRIC TOLERANCING PER:
MATERIAL Monel(R) 400
FINISH
DRAWN 2-23-12 PN WOOD
CHECKED
ENG APPR.
MFG APPR.
Q.A.
COMMENTS:
QUANTITY: 2
NEXT ASSY
USED ON
APPLICATION
PROPRIETARY AND CONFIDENTIAL
THE INFORMATION CONTAINED IN THIS DRAWING IS THE SOLE PROPERTY OF THE U.S. NAVAL RESEARCH LABORATORY. ANY REPRODUCTION IN PART OR AS A WHOLE WITHOUT THE WRITTEN PERMISSION OF THE U.S. NAVAL RESEARCH LABORATORY IS PROHIBITED.
NAVAL RESEARCH LABORATORY
VACUUM ELECTRONICS BRANCH
WASHINGTON, DC 20375-5000
TITLE:
Body Weld Flange
SIZE B
DWG. NO. 120150
REV
SCALE: 2:1
WEIGHT: 0.02
SHEET 1 OF 1

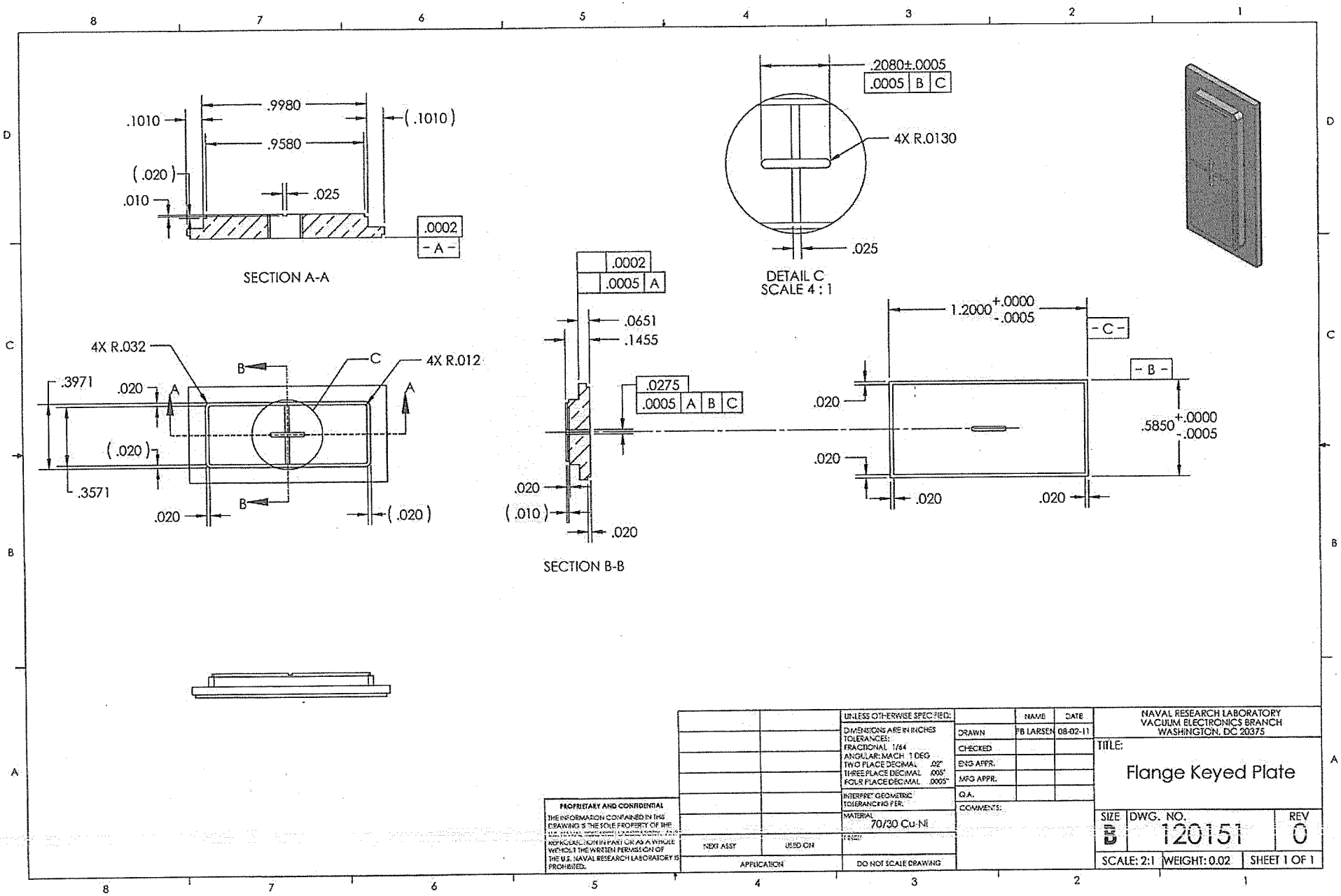
.9980
.1010
(.1010)
.9580
(.020)
.025
.010
.0002
-A-
SECTION A-A
.2080±.0005
.0005 B C
4X R.0130
.025
DETAIL C
SCALE 4 : 1
4X R.032
B
C
4X R.012
.3971
.020
A
A
(.020)
.3571
.020
B
(.020)
.0002
.0005 A
.0651
.1455
.0275
.0005 A B C
.020
(.010)
.020
SECTION B-B
1.2000 +.0000 -.0005
-C-
-B-
.020
.020
.5850 +.0000 -.0005
.020
.020
PROPRIETARY AND CONFIDENTIAL
THE INFORMATION CONTAINED IN THIS DRAWING IS THE SOLE PROPERTY OF THE U.S. NAVAL RESEARCH LABORATORY. ANY REPRODUCTION IN PART OR AS A WHOLE WITHOUT THE WRITTEN PERMISSION OF THE U.S. NAVAL RESEARCH LABORATORY IS PROHIBITED.
NEXT ASSY
USED ON
APPLICATION
UNLESS OTHERWISE SPECIFIED:
DIMENSIONS ARE IN INCHES
TOLERANCES:
FRACTIONAL 1/64
ANGULAR: MACH 1 DEG
TWO PLACE DECIMAL .02"
THREE PLACE DECIMAL .005"
FOUR PLACE DECIMAL .0005"
INTERPRET GEOMETRIC TOLERANCING PER:
MATERIAL
70/30 Cu-Ni
DO NOT SCALE DRAWING
NAME
DATE
DRAWN
FB LARSEN
08-02-11
CHECKED
ENG APPR.
MFG APPR.
Q.A.
COMMENTS:
NAVAL RESEARCH LABORATORY
VACUUM ELECTRONICS BRANCH
WASHINGTON, DC 20375
TITLE:
Flange Keyed Plate
SIZE
B
DWG. NO.
120151
REV
0
SCALE: 2:1
WEIGHT: 0.02
SHEET 1 OF 1

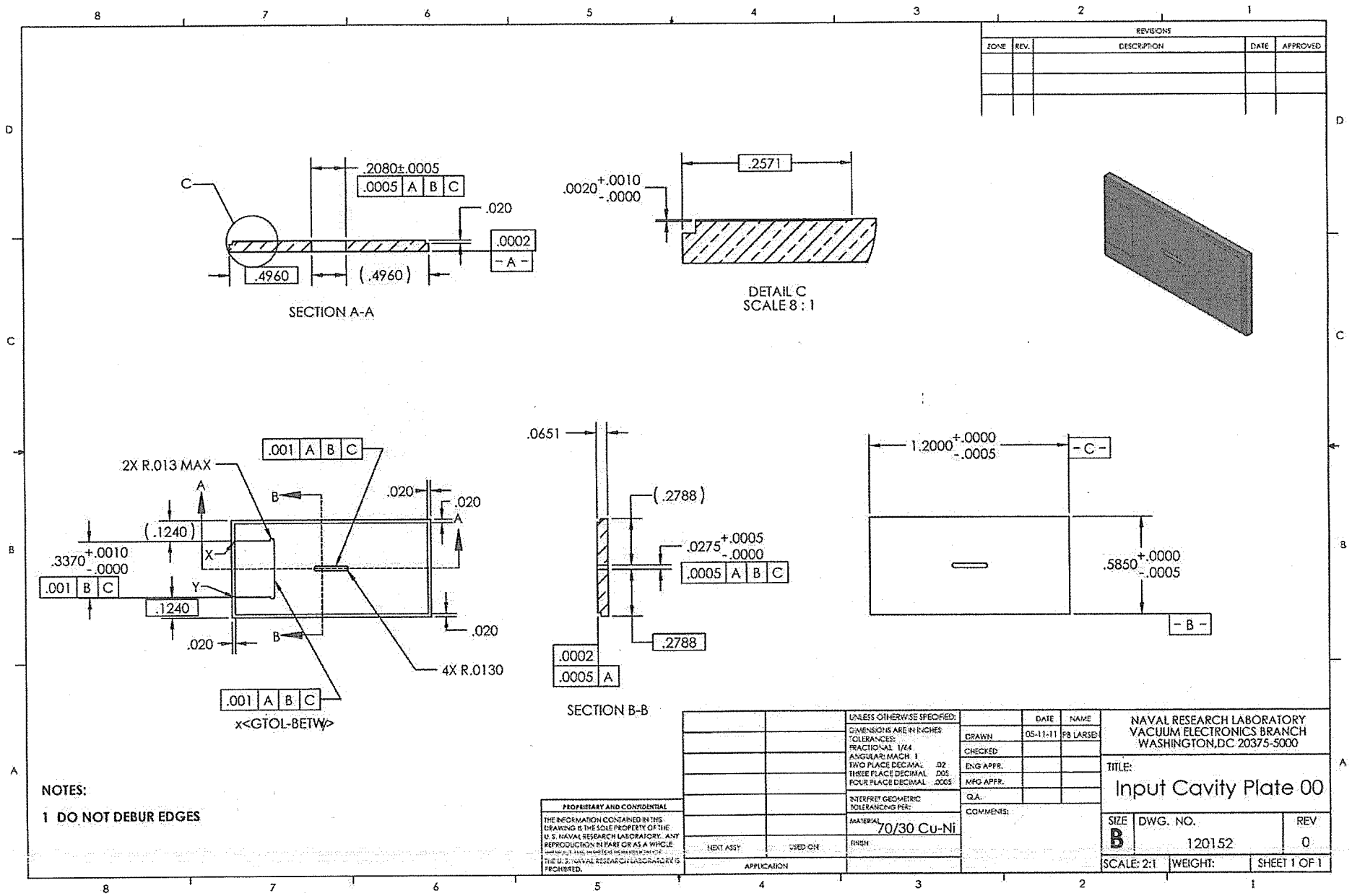
REVISIONS
ZONE
REV.
DESCRIPTION
DATE
APPROVED
.2080±.0005
.0005 A B C
.020
.0002
- A -
.4960
(.4960)
SECTION A-A
.2571
.0020 +.0010 -.0000
DETAIL C
SCALE 8 : 1
2X R.013 MAX
.001 A B C
.020
.020
(.1240)
.3370 +.0010 -.0000
.001 B C
.1240
.020
.020
4X R.0130
.001 A B C
x<GTOL-BETW>
.0651
(.2788)
.0275 +.0005 -.0000
.0005 A B C
.2788
.0002
.0005 A
SECTION B-B
1.2000 +.0000 -.0005
- C -
.5850 +.0000 -.0005
- B -
NOTES:
1 DO NOT DEBUR EDGES
PROPRIETARY AND CONFIDENTIAL
THE INFORMATION CONTAINED IN THIS DRAWING IS THE SOLE PROPERTY OF THE U.S. NAVAL RESEARCH LABORATORY. ANY REPRODUCTION IN PART OR AS A WHOLE WITHOUT THE WRITTEN PERMISSION OF THE U.S. NAVAL RESEARCH LABORATORY IS PROHIBITED.
NEXT ASSY
USED ON
APPLICATION
UNLESS OTHERWISE SPECIFIED:
DIMENSIONS ARE IN INCHES
TOLERANCES:
FRACTIONAL 1/64
ANGULAR: MACH 1
TWO PLACE DECIMAL .02
THREE PLACE DECIMAL .005
FOUR PLACE DECIMAL .0005
INTERPRET GEOMETRIC TOLERANCING PER:
MATERIAL 70/30 Cu-Ni
FINISH
DATE
NAME
DRAWN 05-11-11 PB LARSEN
CHECKED
ENG APPR.
MFG APPR.
Q.A.
COMMENTS:
NAVAL RESEARCH LABORATORY
VACUUM ELECTRONICS BRANCH
WASHINGTON,DC 20375-5000
TITLE:
Input Cavity Plate 00
SIZE B
DWG. NO. 120152
REV 0
SCALE: 2:1
WEIGHT:
SHEET 1 OF 1

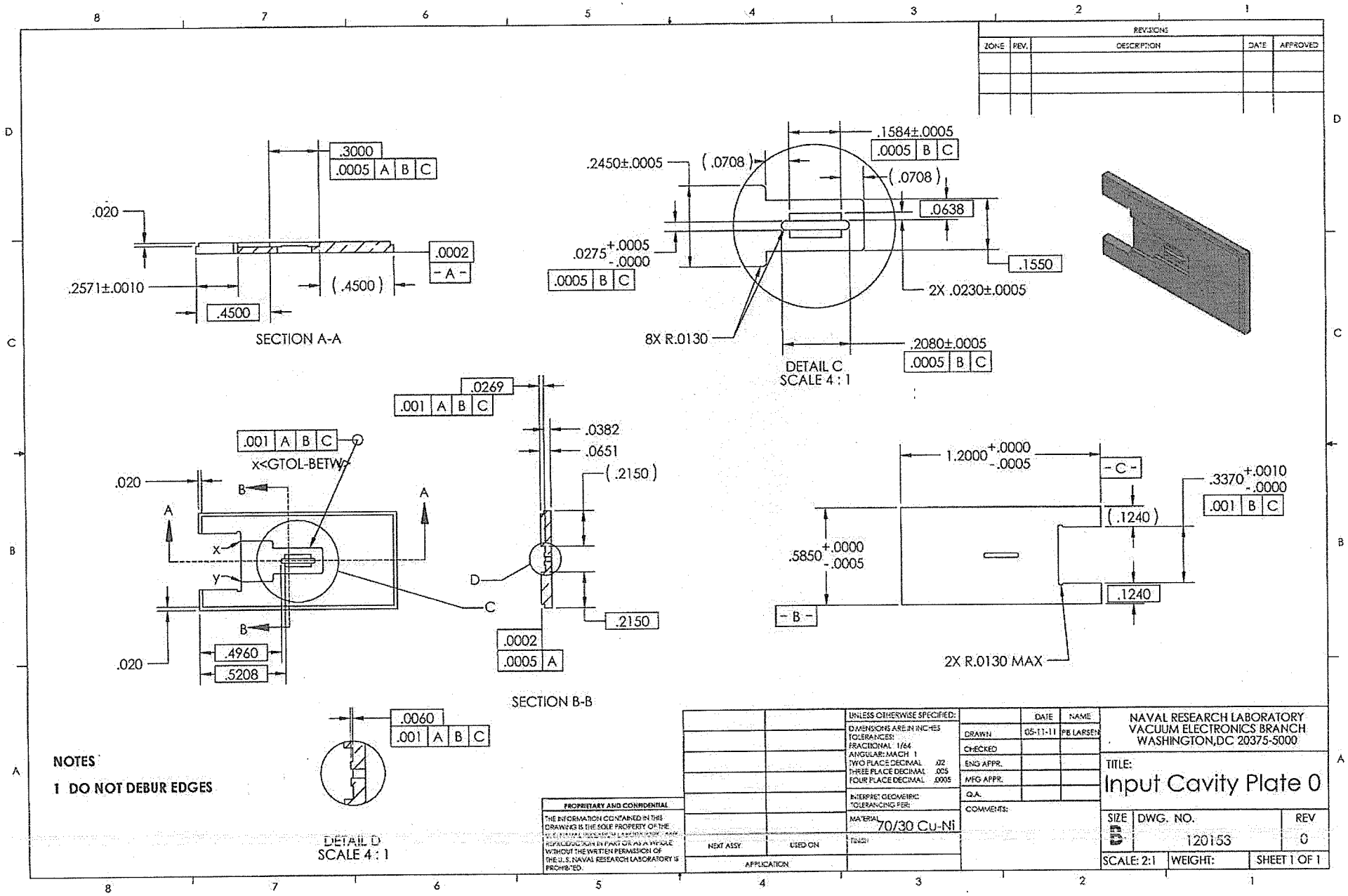
REVISIONS
ZONE | REV. | DESCRIPTION | DATE | APPROVED
.3000
.0005 A B C
.020
.0002
- A -
.2571±.0010
(.4500)
.4500
SECTION A-A
.1584±.0005
.0005 B C
.2450±.0005
(.0708)
(.0708)
.0638
.0275 +.0005 -.0000
.0005 B C
.1550
2X .0230±.0005
8X R.0130
.2080±.0005
.0005 B C
DETAIL C
SCALE 4 : 1
.0269
.001 A B C
.0382
.0651
.001 A B C
X<GTOL-BETW>
(.2150)
.020
B
A
A
X
Y
D
C
B
.2150
.0002
.0005 A
.020
.4960
.5208
SECTION B-B
1.2000 +.0000 -.0005
- C -
.3370 +.0010 -.0000
.001 B C
(.1240)
.5850 +.0000 -.0005
.1240
- B -
2X R.0130 MAX
.0060
.001 A B C
DETAIL D
SCALE 4 : 1
NOTES
1 DO NOT DEBUR EDGES
PROPRIETARY AND CONFIDENTIAL
THE INFORMATION CONTAINED IN THIS DRAWING IS THE SOLE PROPERTY OF THE U.S. NAVAL RESEARCH LABORATORY. ANY REPRODUCTION IN PART OR AS A WHOLE WITHOUT THE WRITTEN PERMISSION OF THE U.S. NAVAL RESEARCH LABORATORY IS PROHIBITED.
NEXT ASSY
USED ON
APPLICATION
UNLESS OTHERWISE SPECIFIED:
DIMENSIONS ARE IN INCHES
TOLERANCES:
FRACTIONAL 1/64
ANGULAR: MACH 1
TWO PLACE DECIMAL .02
THREE PLACE DECIMAL .005
FOUR PLACE DECIMAL .0005
INTERPRET GEOMETRIC TOLERANCING PER:
MATERIAL 70/30 Cu-Ni
FINISH
DRAWN 05-11-11 PB LARSEN
CHECKED
ENG APPR.
MFG APPR.
Q.A.
COMMENTS:
NAVAL RESEARCH LABORATORY
VACUUM ELECTRONICS BRANCH
WASHINGTON,DC 20375-5000
TITLE:
Input Cavity Plate 0
SIZE B
DWG. NO. 120153
REV 0
SCALE: 2:1
WEIGHT:
SHEET 1 OF 1

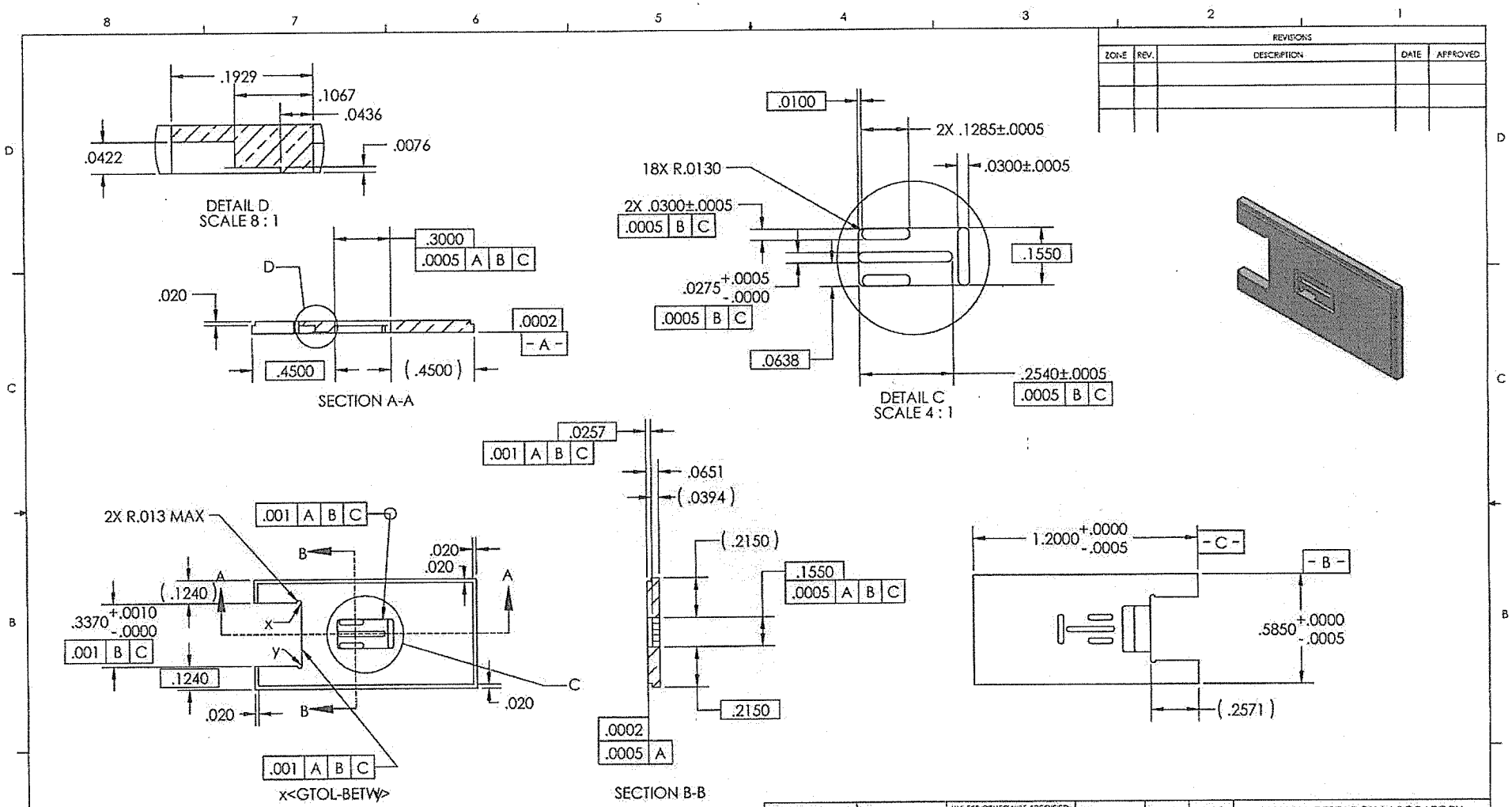

NOTE

1 DO NOT DEBUR EDGES

REVISIONS				
ZONE	REV.	DESCRIPTION	DATE	APPROVED

PROPRIETARY AND CONFIDENTIAL

THE INFORMATION CONTAINED IN THIS DRAWING IS THE SOLE PROPERTY OF THE U.S. NAVAL RESEARCH LABORATORY. ANY REPRODUCTION IN PART OR AS A WHOLE WITHOUT THE WRITTEN PERMISSION OF THE U.S. NAVAL RESEARCH LABORATORY IS PROHIBITED.

NEXT ASSY	USED ON
APPLICATION	

UNLESS OTHERWISE SPECIFIED:
DIMENSIONS ARE IN INCHES
TOLERANCES:
FRACTIONAL ±1/64
ANGULAR: MACH ±1
TWO PLACE DECIMAL ±.02
THREE PLACE DECIMAL ±.005
FOUR PLACE DECIMAL ±.0005
INTERPRET GEOMETRIC TOLERANCING PER:
MATERIAL 70/30 Cu-Ni
finish

	DATE	NAME
DRAWN	07-27-11	PB LARSEN
CHECKED		
ENG APPR.		
MFG APPR.		
Q.A.		

COMMENTS:

NAVAL RESEARCH LABORATORY
VACUUM ELECTRONICS BRANCH
WASHINGTON,DC 20375-5000

TITLE:
Input Cavity Plate 1

SIZE	DWG. NO.	REV
B	120154	0

SCALE: 2:1 | WEIGHT: | SHEET 1 OF 1

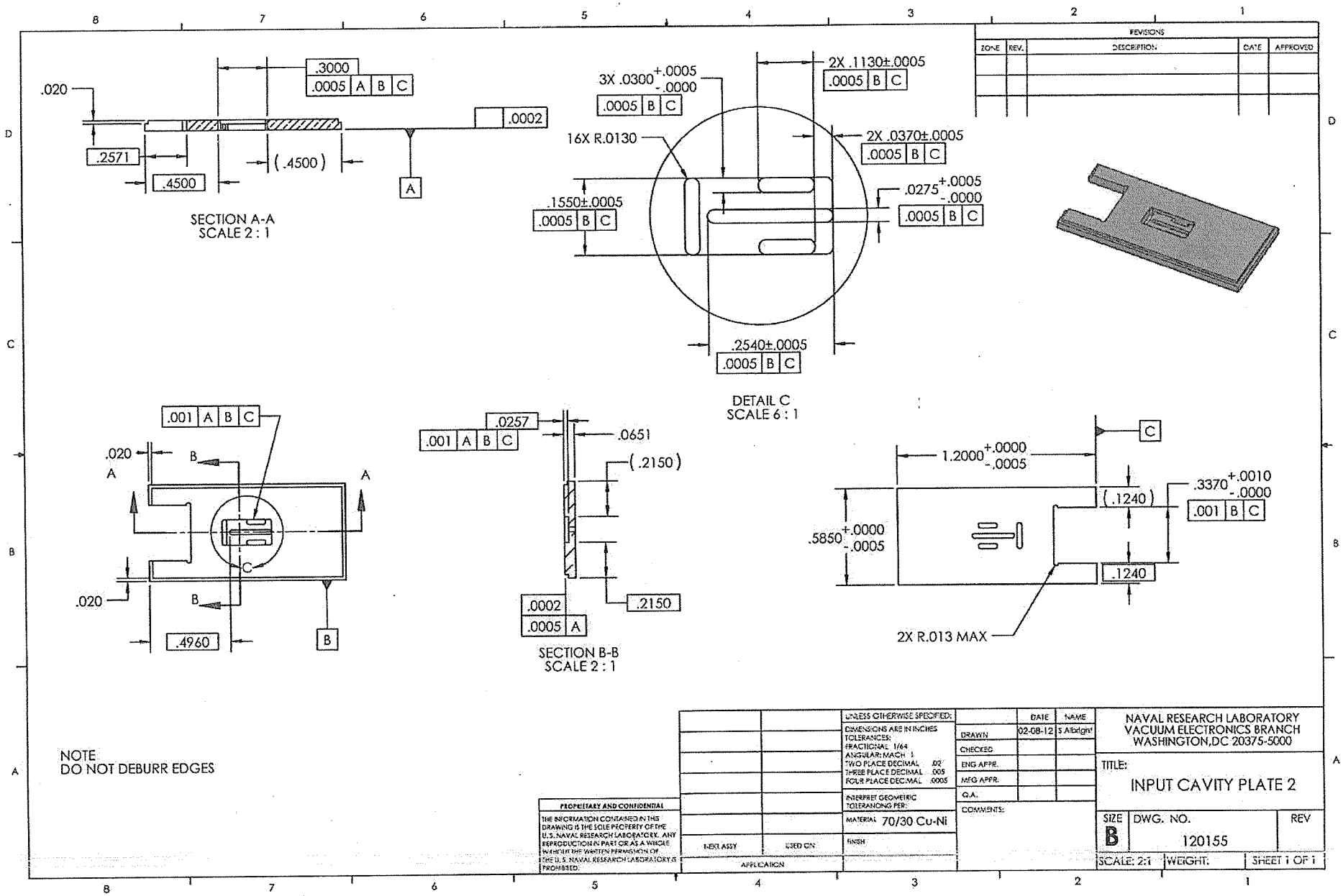
.020
.3000
.0005 A B C
.0002
.2571
.4500
(.4500)
A
SECTION A-A
SCALE 2 : 1
3X .0300 +.0005 -.0000
.0005 B C
2X .1130±.0005
.0005 B C
16X R.0130
2X .0370±.0005
.0005 B C
.1550±.0005
.0005 B C
.0275 +.0005 -.0000
.0005 B C
.2540±.0005
.0005 B C
DETAIL C
SCALE 6 : 1
.001 A B C
.020
A
B
C
.4960
.0257
.001 A B C
.0651
(.2150)
.0002
.0005 A
.2150
SECTION B-B
SCALE 2 : 1
C
1.2000 +.0000 -.0005
(.1240)
.3370 +.0010 -.0000
.001 B C
.5850 +.0000 -.0005
.1240
2X R.013 MAX
REVISIONS
ZONE
REV.
DESCRIPTION
DATE
APPROVED
NOTE
DO NOT DEBURR EDGES
PROPRIETARY AND CONFIDENTIAL
THE INFORMATION CONTAINED IN THIS DRAWING IS THE SOLE PROPERTY OF THE U.S. NAVAL RESEARCH LABORATORY. ANY REPRODUCTION IN PART OR AS A WHOLE WITHOUT THE WRITTEN PERMISSION OF THE U.S. NAVAL RESEARCH LABORATORY IS PROHIBITED.
NEXT ASSY
USED ON
APPLICATION
UNLESS OTHERWISE SPECIFIED:
DIMENSIONS ARE IN INCHES
TOLERANCES:
FRACTIONAL 1/64
ANGULAR: MACH 1
TWO PLACE DECIMAL .02
THREE PLACE DECIMAL .005
FOUR PLACE DECIMAL .0005
INTERPRET GEOMETRIC TOLERANCING PER:
MATERIAL 70/30 Cu-Ni
FINISH
DRAWN 02-08-12 S Albdgnt
CHECKED
ENG APPR.
MFG APPR.
Q.A.
COMMENTS:
NAVAL RESEARCH LABORATORY
VACUUM ELECTRONICS BRANCH
WASHINGTON,DC 20375-5000
TITLE:
INPUT CAVITY PLATE 2
SIZE B
DWG. NO. 120155
REV
SCALE: 2:1
WEIGHT:
SHEET 1 OF 1

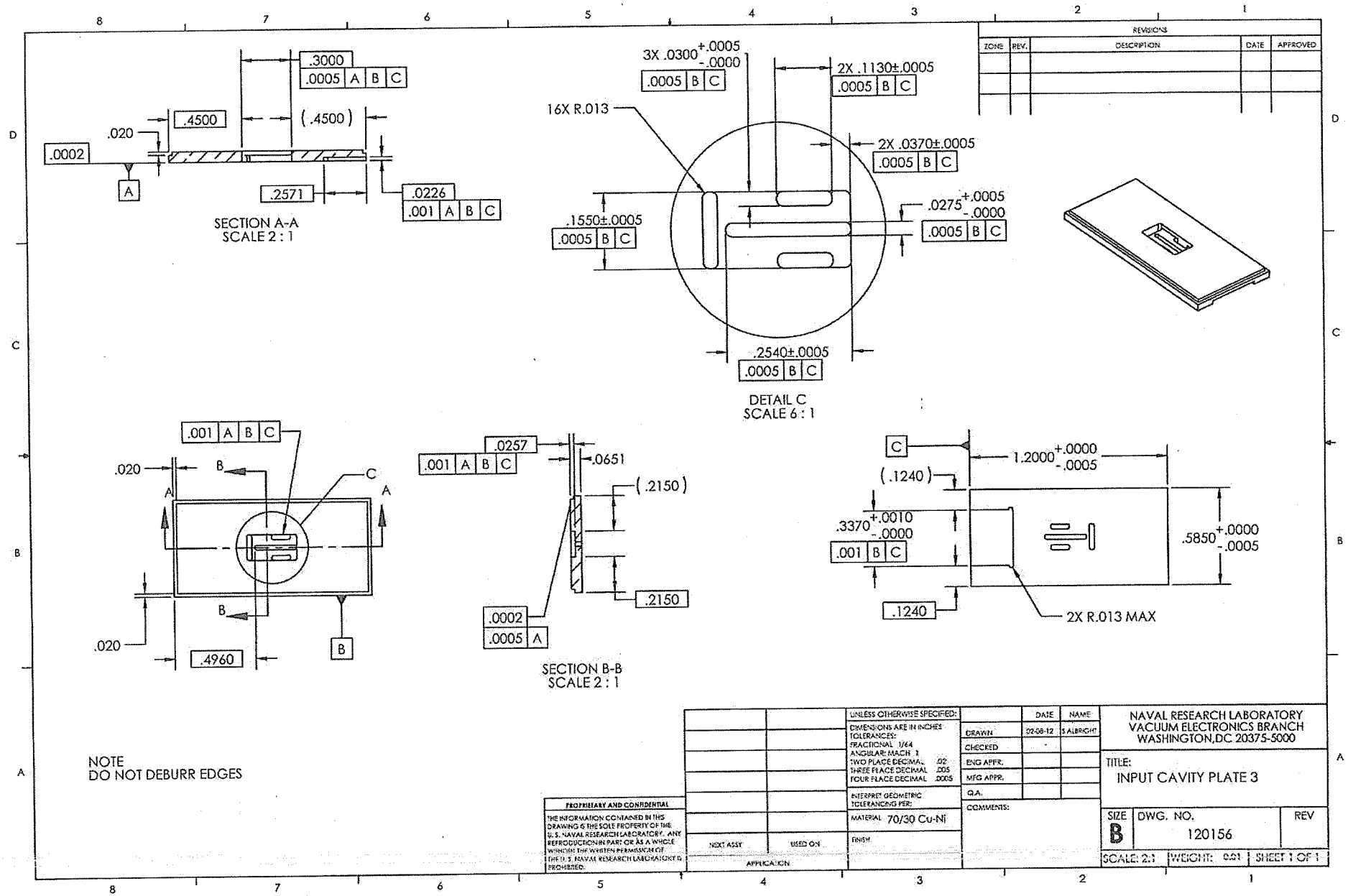
.3000
.0005 A B C
.4500
(.4500)
.020
.0002
A
.2571
.0226
.001 A B C
SECTION A-A
SCALE 2 : 1
3X .0300 +.0005 -.0000
.0005 B C
2X .1130±.0005
.0005 B C
16X R.013
2X .0370±.0005
.0005 B C
.0275 +.0005 -.0000
.0005 B C
.1550±.0005
.0005 B C
.2540±.0005
.0005 B C
DETAIL C
SCALE 6 : 1
.001 A B C
.020
B
C
A
A
B
.020
.4960
B
.0257
.001 A B C
.0651
(.2150)
.2150
.0002
.0005 A
SECTION B-B
SCALE 2 : 1
C
1.2000 +.0000 -.0005
(.1240)
.3370 +.0010 -.0000
.001 B C
.5850 +.0000 -.0005
.1240
2X R.013 MAX
NOTE
DO NOT DEBURR EDGES
PROPRIETARY AND CONFIDENTIAL
THE INFORMATION CONTAINED IN THIS DRAWING IS THE SOLE PROPERTY OF THE U. S. NAVAL RESEARCH LABORATORY. ANY REPRODUCTION IN PART OR AS A WHOLE WITHOUT THE WRITTEN PERMISSION OF THE U. S. NAVAL RESEARCH LABORATORY IS PROHIBITED.
NEXT ASSY
USED ON
APPLICATION
UNLESS OTHERWISE SPECIFIED:
DIMENSIONS ARE IN INCHES
TOLERANCES:
FRACTIONAL 1/64
ANGULAR: MACH 1
TWO PLACE DECIMAL .02
THREE PLACE DECIMAL .005
FOUR PLACE DECIMAL .0005
INTERPRET GEOMETRIC TOLERANCING PER:
MATERIAL 70/30 Cu-Ni
FINISH
DRAWN 02-08-12 S ALBRIGHT
CHECKED
ENG APPR.
MFG APPR.
Q.A.
COMMENTS:
NAVAL RESEARCH LABORATORY
VACUUM ELECTRONICS BRANCH
WASHINGTON,DC 20375-5000
TITLE:
INPUT CAVITY PLATE 3
SIZE B
DWG. NO. 120156
REV
SCALE: 2:1
WEIGHT: 0.01
SHEET 1 OF 1
REVISIONS
ZONE REV. DESCRIPTION DATE APPROVED

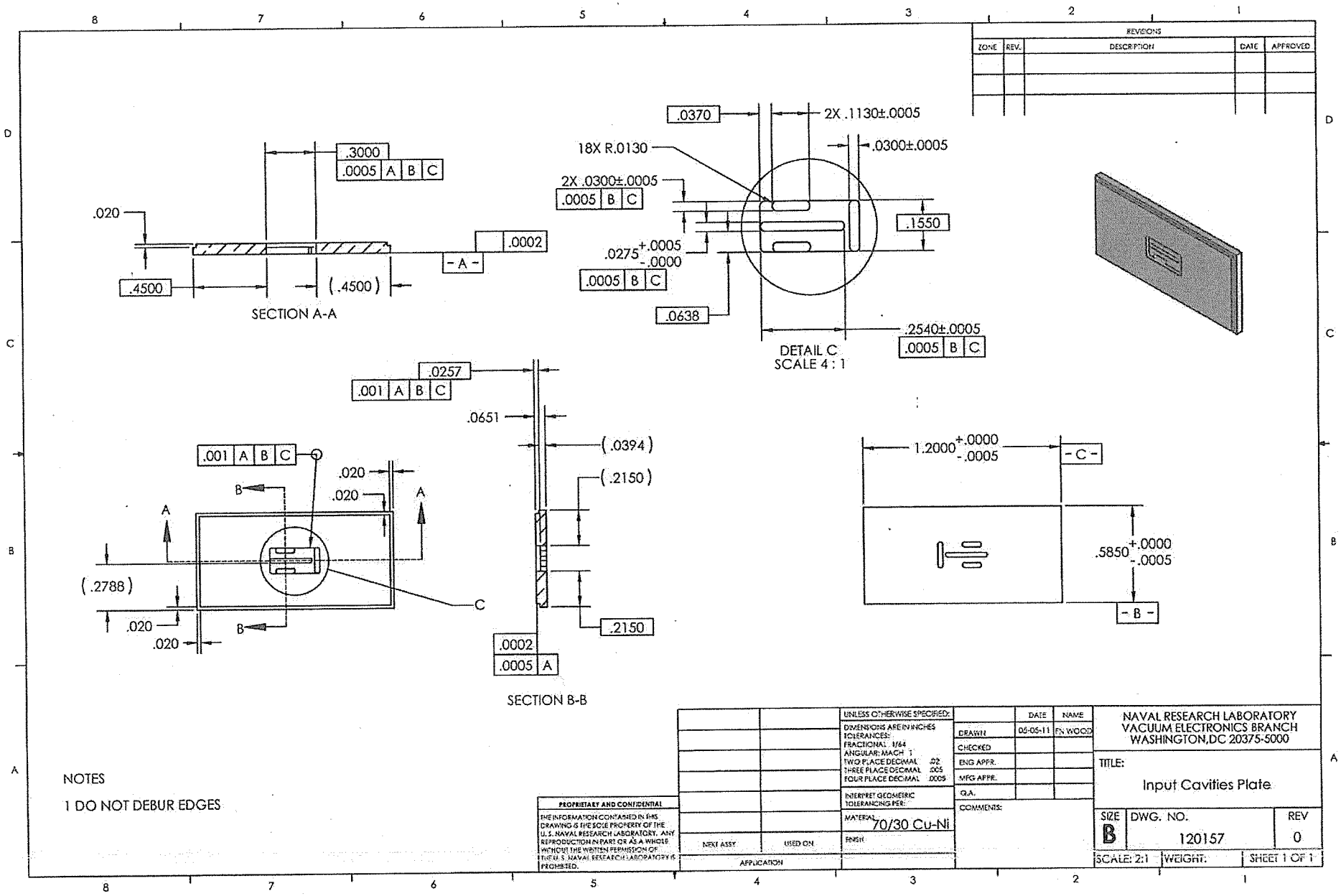
.3000
.0005 A B C
.020
.0002
- A -
.4500
(.4500)
SECTION A-A
.0370
2X .1130±.0005
18X R.0130
.0300±.0005
2X .0300±.0005
.0005 B C
.1550
.0275 +.0005 -.0000
.0005 B C
.0638
.2540±.0005
.0005 B C
DETAIL C
SCALE 4 : 1
.0257
.001 A B C
.0651
(.0394)
(.2150)
.001 A B C
.020
.020
A
A
B
B
C
(.2788)
.020
.020
.2150
.0002
.0005 A
SECTION B-B
1.2000 +.0000 -.0005
- C -
.5850 +.0000 -.0005
- B -
NOTES
1 DO NOT DEBUR EDGES
REVISIONS
ZONE
REV.
DESCRIPTION
DATE
APPROVED
PROPRIETARY AND CONFIDENTIAL
THE INFORMATION CONTAINED IN THIS DRAWING IS THE SOLE PROPERTY OF THE U.S. NAVAL RESEARCH LABORATORY. ANY REPRODUCTION IN PART OR AS A WHOLE WITHOUT THE WRITTEN PERMISSION OF THE U.S. NAVAL RESEARCH LABORATORY IS PROHIBITED.
NEXT ASSY
USED ON
APPLICATION
UNLESS OTHERWISE SPECIFIED:
DIMENSIONS ARE IN INCHES
TOLERANCES:
FRACTIONAL ±1/64
ANGULAR: MACH ±1
TWO PLACE DECIMAL ±.02
THREE PLACE DECIMAL ±.005
FOUR PLACE DECIMAL ±.0005
INTERPRET GEOMETRIC TOLERANCING PER:
MATERIAL 70/30 Cu-Ni
FINISH
DRAWN 05-05-11 FN WOOD
CHECKED
ENG APPR.
MFG APPR.
Q.A.
COMMENTS:
NAVAL RESEARCH LABORATORY
VACUUM ELECTRONICS BRANCH
WASHINGTON,DC 20375-5000
TITLE:
Input Cavities Plate
SIZE B
DWG. NO. 120157
REV 0
SCALE: 2:1
WEIGHT:
SHEET 1 OF 1

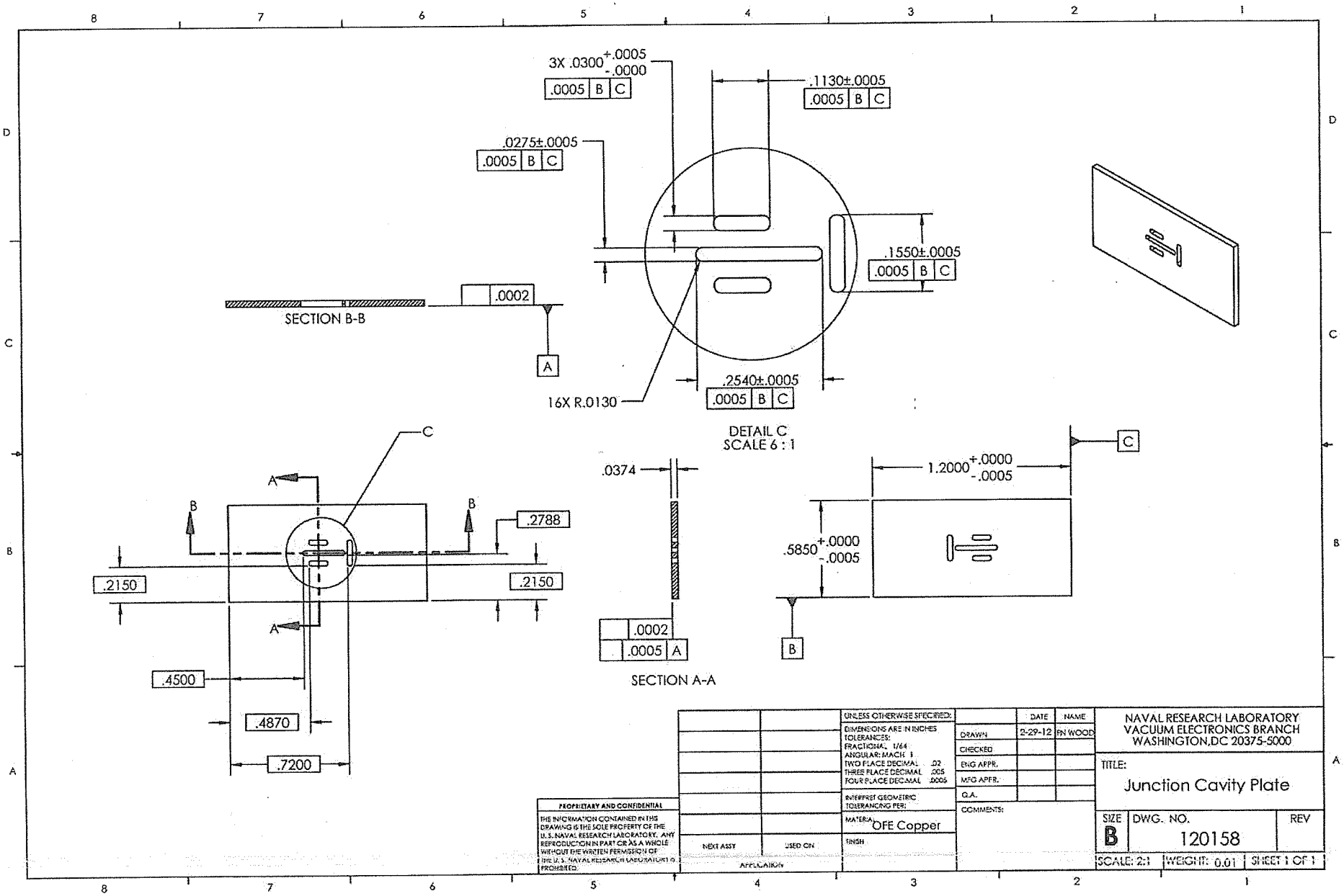
3X .0300 +.0005 -.0000
.0005 B C
.1130±.0005
.0005 B C
.0275±.0005
.0005 B C
.1550±.0005
.0005 B C
.0002
SECTION B-B
A
16X R.0130
.2540±.0005
.0005 B C
DETAIL C
SCALE 6 : 1
C
A
B
B
.2788
.2150
.2150
A
.4500
.4870
.7200
.0374
.0002
.0005 A
SECTION A-A
1.2000 +.0000 -.0005
C
.5850 +.0000 -.0005
B
PROPRIETARY AND CONFIDENTIAL
THE INFORMATION CONTAINED IN THIS DRAWING IS THE SOLE PROPERTY OF THE U.S. NAVAL RESEARCH LABORATORY. ANY REPRODUCTION IN PART OR AS A WHOLE WITHOUT THE WRITTEN PERMISSION OF THE U.S. NAVAL RESEARCH LABORATORY IS PROHIBITED.
NEXT ASSY
USED ON
APPLICATION
UNLESS OTHERWISE SPECIFIED:
DIMENSIONS ARE IN INCHES
TOLERANCES:
FRACTIONAL ±1/64
ANGULAR: MACH ±1
TWO PLACE DECIMAL ±.02
THREE PLACE DECIMAL ±.005
FOUR PLACE DECIMAL ±.0005
INTERPRET GEOMETRIC TOLERANCING PER:
MATERIAL OFE Copper
FINISH
DRAWN 2-29-12 BN WOOD
CHECKED
ENG APPR.
MFG APPR.
Q.A.
COMMENTS:
NAVAL RESEARCH LABORATORY
VACUUM ELECTRONICS BRANCH
WASHINGTON,DC 20375-5000
TITLE:
Junction Cavity Plate
SIZE B
DWG. NO. 120158
REV
SCALE: 2:1
WEIGHT: 0.01
SHEET 1 OF 1

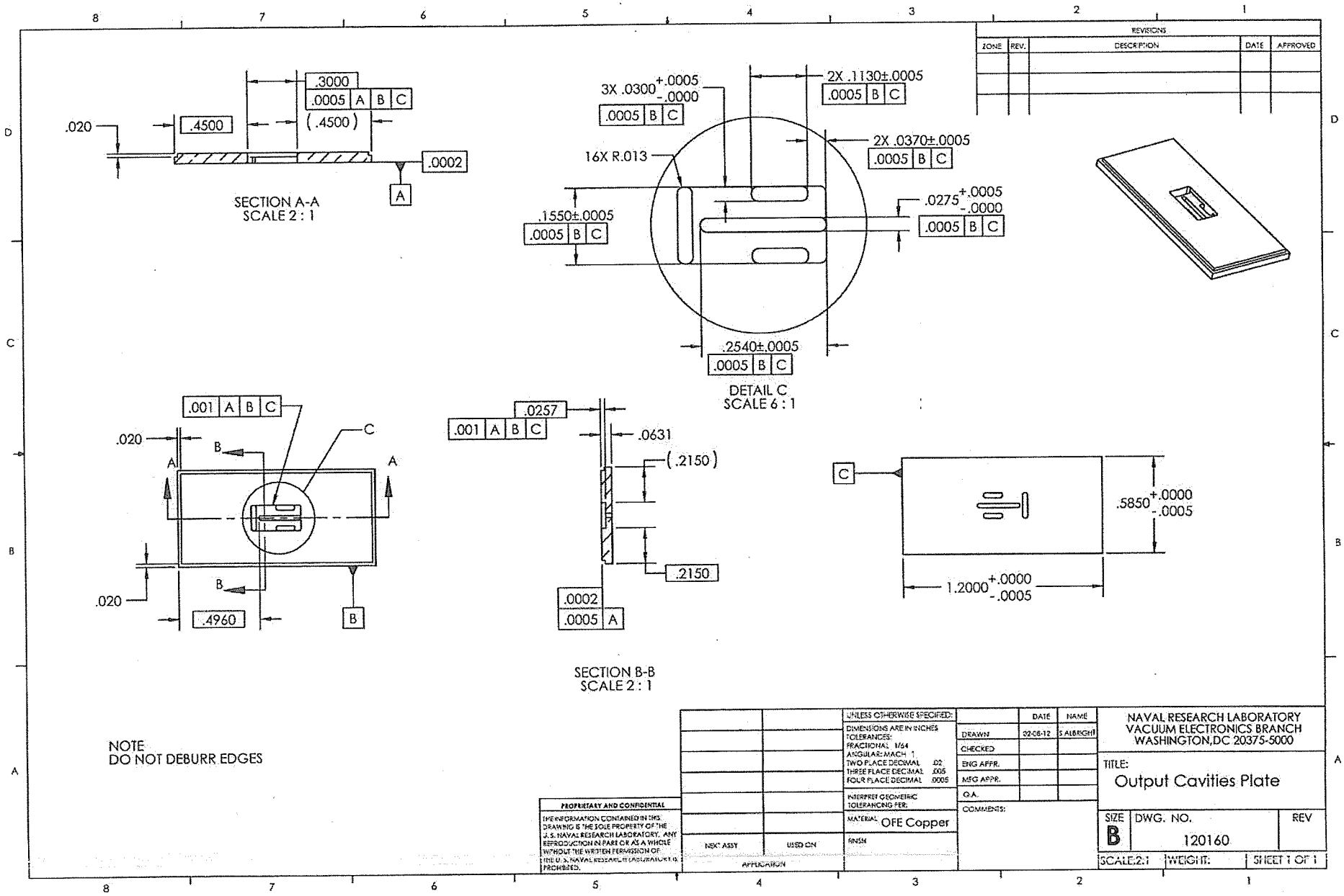
SECTION A-A
SCALE 2 : 1
.020
.4500
.3000
.0005 A B C
(.4500)
.0002
A
3X .0300 +.0005 -.0000
.0005 B C
2X .1130±.0005
.0005 B C
2X .0370±.0005
.0005 B C
16X R.013
.1550±.0005
.0005 B C
.0275 +.0005 -.0000
.0005 B C
.2540±.0005
.0005 B C
DETAIL C
SCALE 6 : 1
.001 A B C
.020
B
C
A
A
B
.020
.4960
B
.0257
.001 A B C
.0631
(.2150)
.2150
.0002
.0005 A
SECTION B-B
SCALE 2 : 1
C
.5850 +.0000 -.0005
1.2000 +.0000 -.0005
NOTE
DO NOT DEBURR EDGES
REVISIONS
ZONE
REV.
DESCRIPTION
DATE
APPROVED
PROPRIETARY AND CONFIDENTIAL
THE INFORMATION CONTAINED IN THIS DRAWING IS THE SOLE PROPERTY OF THE U.S. NAVAL RESEARCH LABORATORY. ANY REPRODUCTION IN PART OR AS A WHOLE WITHOUT THE WRITTEN PERMISSION OF THE U.S. NAVAL RESEARCH LABORATORY IS PROHIBITED.
NEXT ASSY
USED ON
APPLICATION
UNLESS OTHERWISE SPECIFIED:
DIMENSIONS ARE IN INCHES
TOLERANCES:
FRACTIONAL ±1/64
ANGULAR: MACH ±1
TWO PLACE DECIMAL ±.02
THREE PLACE DECIMAL ±.005
FOUR PLACE DECIMAL ±.0005
INTERPRET GEOMETRIC TOLERANCING PER:
MATERIAL OFE Copper
FINISH
DRAWN 02-08-12 S ALBRIGHT
CHECKED
ENG APPR.
MFG APPR.
Q.A.
COMMENTS:
NAVAL RESEARCH LABORATORY
VACUUM ELECTRONICS BRANCH
WASHINGTON, DC 20375-5000
TITLE:
Output Cavities Plate
SIZE B
DWG. NO. 120160
REV
SCALE:2:1
WEIGHT:
SHEET 1 OF 1

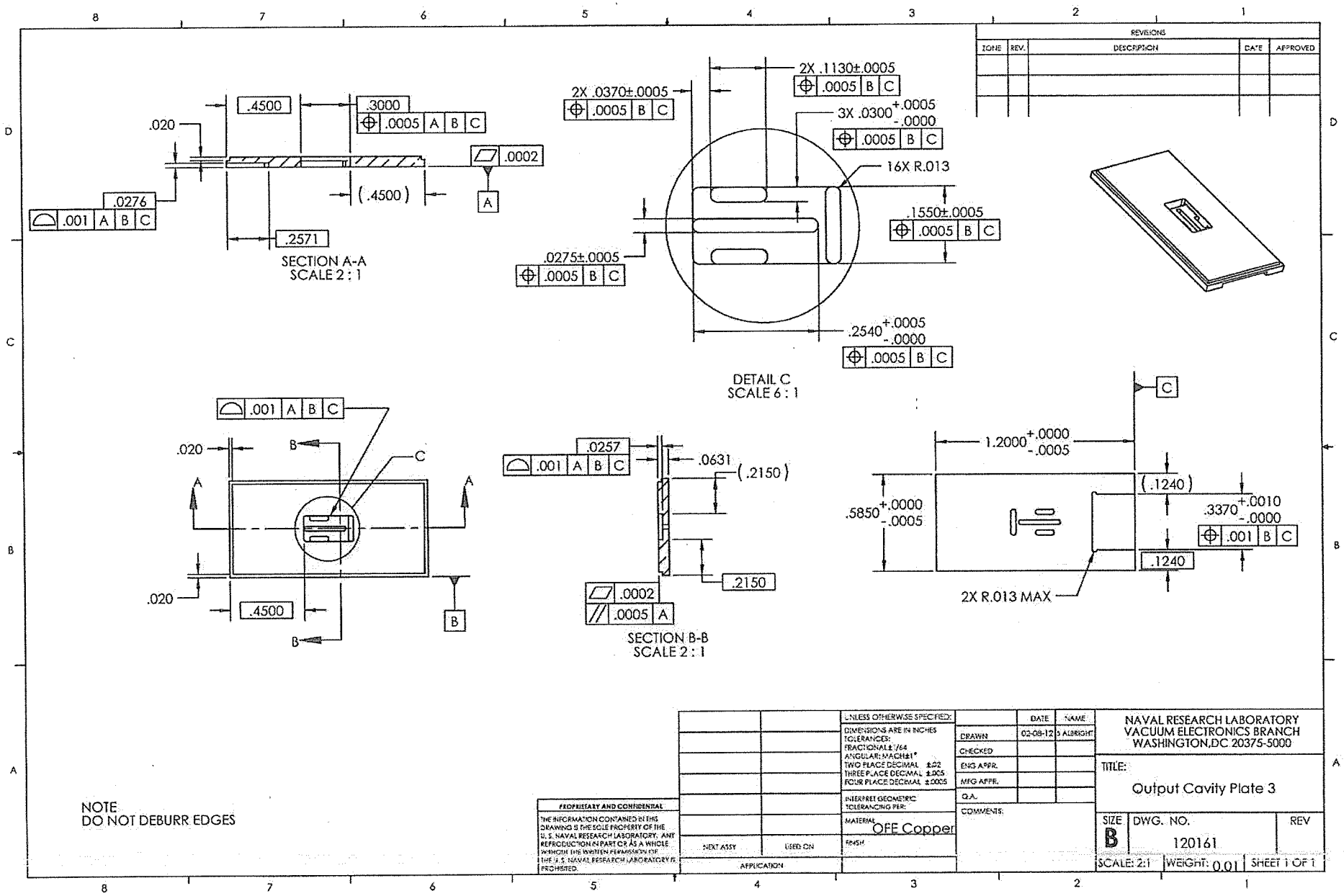
SECTION A-A
SCALE 2 : 1
.4500
.3000
.0005 A B C
.020
.0002
A
.0276
.001 A B C
(.4500)
.2571
DETAIL C
SCALE 6 : 1
2X .1130±.0005
.0005 B C
2X .0370±.0005
3X .0300 +.0005 -.0000
16X R.013
.1550±.0005
.0275±.0005
.2540 +.0005 -.0000
C
.001 A B C
.020
B
.4500
.0257
.0631
(.2150)
.2150
.0002
.0005 A
SECTION B-B
SCALE 2 : 1
1.2000 +.0000 -.0005
.5850 +.0000 -.0005
(.1240)
.3370 +.0010 -.0000
.001 B C
.1240
2X R.013 MAX
NOTE
DO NOT DEBURR EDGES
PROPRIETARY AND CONFIDENTIAL
THE INFORMATION CONTAINED IN THIS DRAWING IS THE SOLE PROPERTY OF THE U. S. NAVAL RESEARCH LABORATORY. ANY REPRODUCTION IN PART OR AS A WHOLE WITHOUT THE WRITTEN PERMISSION OF THE U. S. NAVAL RESEARCH LABORATORY IS PROHIBITED.
NEXT ASSY
USED ON
APPLICATION
UNLESS OTHERWISE SPECIFIED:
DIMENSIONS ARE IN INCHES
TOLERANCES:
FRACTIONAL ±1/64
ANGULAR: MACH ±1°
TWO PLACE DECIMAL ±.02
THREE PLACE DECIMAL ±.005
FOUR PLACE DECIMAL ±.0005
INTERPRET GEOMETRIC TOLERANCING PER:
MATERIAL OFE Copper
FINISH
DRAWN 02-08-12 S ALBRIGHT
CHECKED
ENG APPR.
MFG APPR.
Q.A.
COMMENTS:
NAVAL RESEARCH LABORATORY
VACUUM ELECTRONICS BRANCH
WASHINGTON,DC 20375-5000
TITLE:
Output Cavity Plate 3
SIZE B
DWG. NO. 120161
REV
SCALE: 2:1
WEIGHT: 0.01
SHEET 1 OF 1
REVISIONS
ZONE REV. DESCRIPTION DATE APPROVED

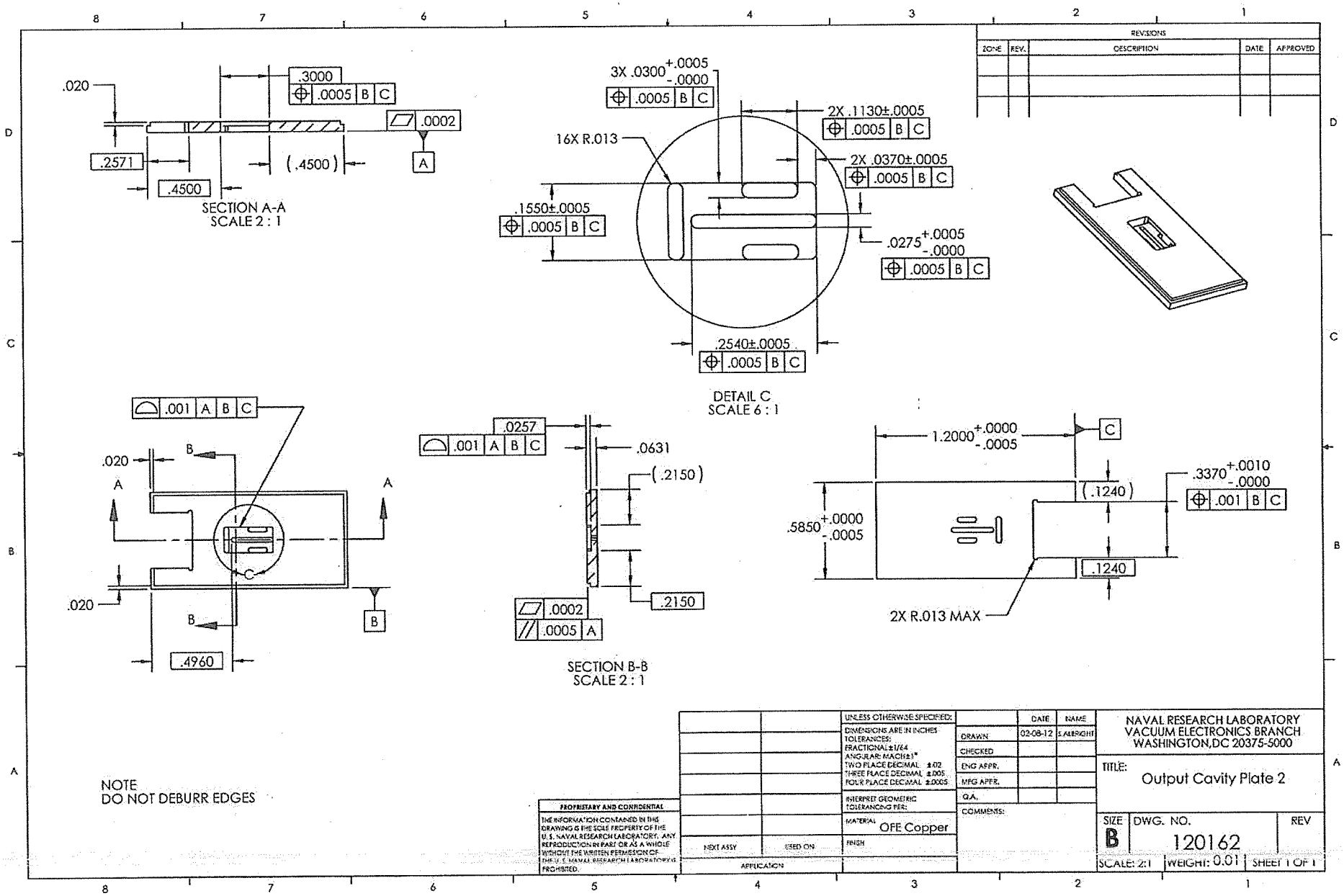
.020
.3000
.0005 B C
.0002
A
.2571
.4500
(.4500)
SECTION A-A
SCALE 2 : 1
3X .0300 +.0005 -.0000
.0005 B C
16X R.013
2X .1130±.0005
.0005 B C
2X .0370±.0005
.0005 B C
.1550±.0005
.0005 B C
.0275 +.0005 -.0000
.0005 B C
.2540±.0005
.0005 B C
DETAIL C
SCALE 6 : 1
.001 A B C
.020
B
A
A
.020
B
B
.4960
.0257
.001 A B C
.0631
(.2150)
.2150
.0002
.0005 A
SECTION B-B
SCALE 2 : 1
1.2000 +.0000 -.0005
C
.3370 +.0010 -.0000
.001 B C
(.1240)
.5850 +.0000 -.0005
.1240
2X R.013 MAX
NOTE
DO NOT DEBURR EDGES
REVISIONS
ZONE
REV.
DESCRIPTION
DATE
APPROVED
PROPRIETARY AND CONFIDENTIAL
THE INFORMATION CONTAINED IN THIS DRAWING IS THE SOLE PROPERTY OF THE U.S. NAVAL RESEARCH LABORATORY. ANY REPRODUCTION IN PART OR AS A WHOLE WITHOUT THE WRITTEN PERMISSION OF THE U.S. NAVAL RESEARCH LABORATORY IS PROHIBITED.
NEXT ASSY
USED ON
APPLICATION
UNLESS OTHERWISE SPECIFIED:
DIMENSIONS ARE IN INCHES
TOLERANCES:
FRACTIONAL ±1/64
ANGULAR: MACH ±1°
TWO PLACE DECIMAL ±.02
THREE PLACE DECIMAL ±.005
FOUR PLACE DECIMAL ±.0005
INTERPRET GEOMETRIC TOLERANCING PER:
MATERIAL OFE Copper
FINISH
DRAWN 02-08-12 S ALBRIGHT
CHECKED
ENG APPR.
MFG APPR.
Q.A.
COMMENTS:
NAVAL RESEARCH LABORATORY
VACUUM ELECTRONICS BRANCH
WASHINGTON, DC 20375-5000
TITLE:
Output Cavity Plate 2
SIZE B
DWG. NO. 120162
REV
SCALE: 2:1
WEIGHT: 0.01
SHEET 1 OF 1

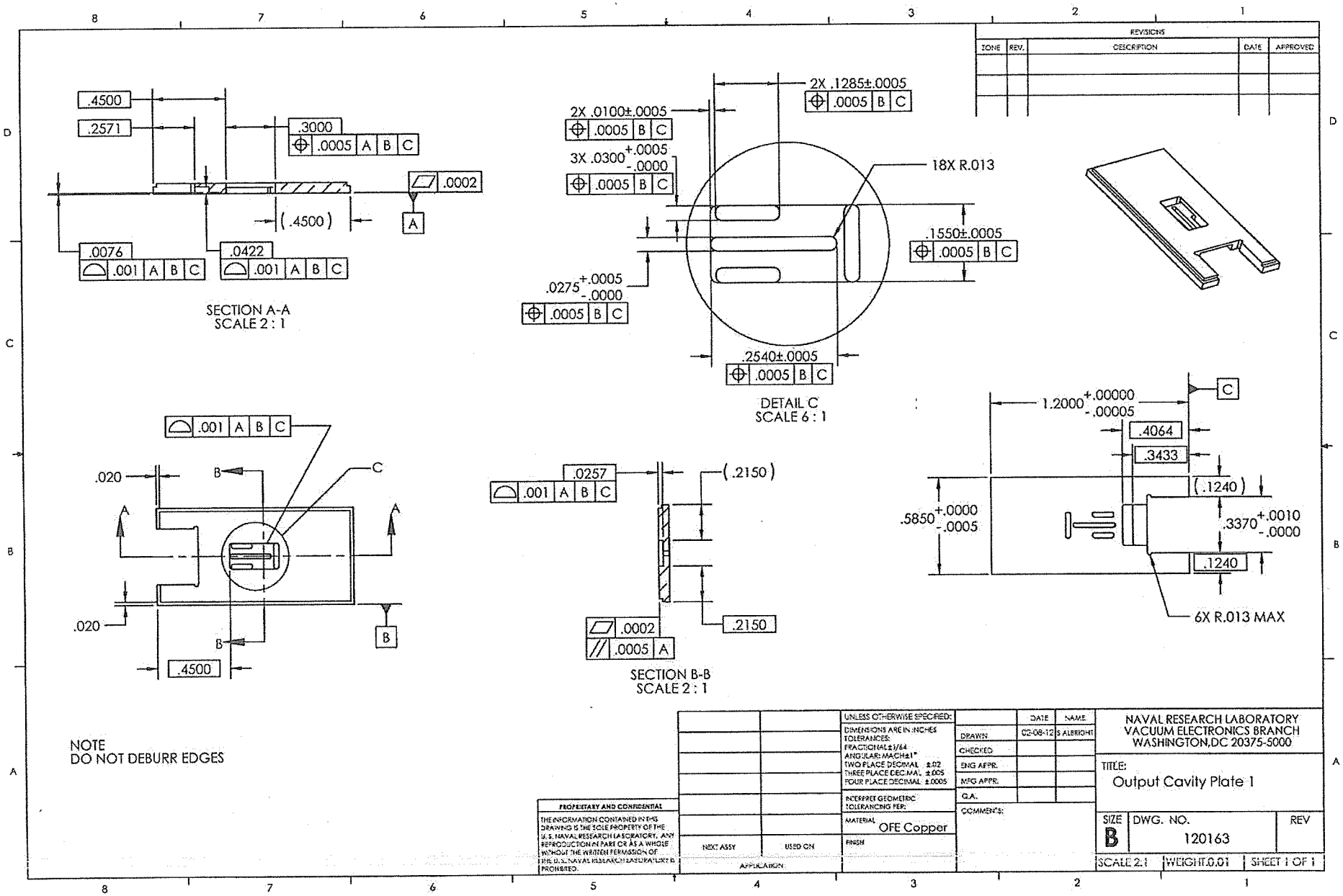
REVISIONS
ZONE | REV. | DESCRIPTION | DATE | APPROVED
.4500
.2571
.3000
.0005 A B C
.0002
A
(.4500)
.0076
.001 A B C
.0422
.001 A B C
SECTION A-A
SCALE 2 : 1
2X .1285±.0005
.0005 B C
2X .0100±.0005
.0005 B C
3X .0300 +.0005 -.0000
.0005 B C
18X R.013
.1550±.0005
.0005 B C
.0275 +.0005 -.0000
.0005 B C
.2540±.0005
.0005 B C
DETAIL C
SCALE 6 : 1
.001 A B C
.020
B
C
A
A
.020
B
B
.4500
.0257
.001 A B C
(.2150)
.0002
.0005 A
.2150
SECTION B-B
SCALE 2 : 1
1.2000 +.00000 -.00005
C
.4064
.3433
(.1240)
.5850 +.0000 -.0005
.3370 +.0010 -.0000
.1240
6X R.013 MAX
NOTE
DO NOT DEBURR EDGES
PROPRIETARY AND CONFIDENTIAL
THE INFORMATION CONTAINED IN THIS DRAWING IS THE SOLE PROPERTY OF THE U.S. NAVAL RESEARCH LABORATORY. ANY REPRODUCTION IN PART OR AS A WHOLE WITHOUT THE WRITTEN PERMISSION OF THE U.S. NAVAL RESEARCH LABORATORY IS PROHIBITED.
NEXT ASSY
USED ON
APPLICATION
UNLESS OTHERWISE SPECIFIED:
DIMENSIONS ARE IN INCHES
TOLERANCES:
FRACTIONAL ±1/64
ANGULAR: MACH ±1°
TWO PLACE DECIMAL ±.02
THREE PLACE DECIMAL ±.005
FOUR PLACE DECIMAL ±.0005
INTERPRET GEOMETRIC TOLERANCING PER:
MATERIAL OFE Copper
FINISH
DRAWN 02-08-12 S ALBRIGHT
CHECKED
ENG APPR.
MFG APPR.
Q.A.
COMMENTS:
NAVAL RESEARCH LABORATORY
VACUUM ELECTRONICS BRANCH
WASHINGTON, DC 20375-5000
TITLE:
Output Cavity Plate 1
SIZE B
DWG. NO. 120163
REV
SCALE 2:1
WEIGHT 0.01
SHEET 1 OF 1

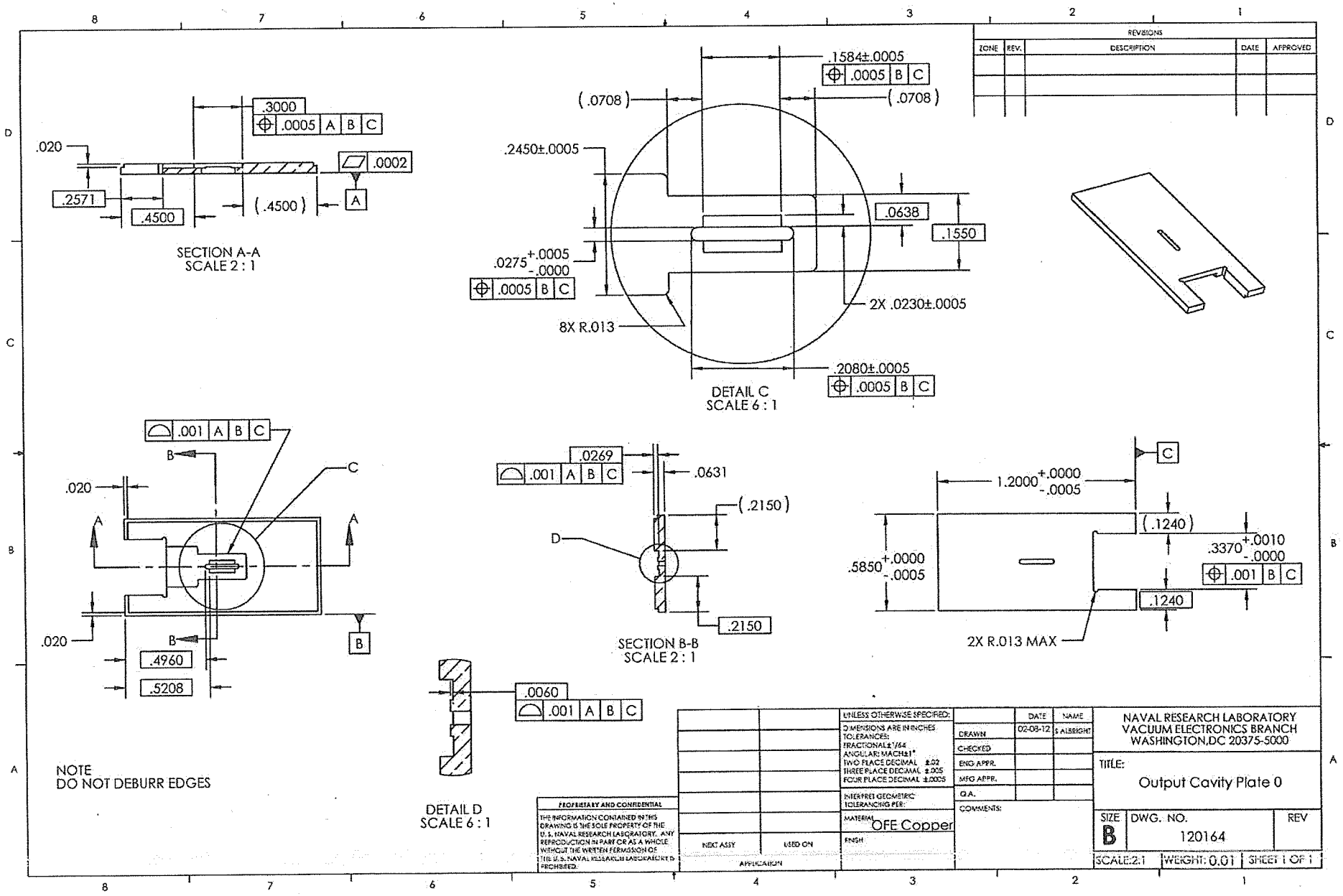
SECTION A-A
SCALE 2 : 1
.3000
.0005 A B C
.020
.0002
A
.2571
.4500
(.4500)
DETAIL C
SCALE 6 : 1
.1584±.0005
.0005 B C
(.0708)
(.0708)
.2450±.0005
.0638
.1550
.0275 +.0005 -.0000
.0005 B C
2X .0230±.0005
8X R.013
.2080±.0005
.0005 B C
.001 A B C
B
C
.020
A
A
.020
B
B
.4960
.5208
SECTION B-B
SCALE 2 : 1
.0269
.001 A B C
.0631
(.2150)
D
.2150
1.2000 +.0000 -.0005
C
(.1240)
.5850 +.0000 -.0005
.3370 +.0010 -.0000
.001 B C
.1240
2X R.013 MAX
.0060
.001 A B C
DETAIL D
SCALE 6 : 1
NOTE
DO NOT DEBURR EDGES
REVISIONS
ZONE
REV.
DESCRIPTION
DATE
APPROVED
PROPRIETARY AND CONFIDENTIAL
THE INFORMATION CONTAINED IN THIS DRAWING IS THE SOLE PROPERTY OF THE U.S. NAVAL RESEARCH LABORATORY. ANY REPRODUCTION IN PART OR AS A WHOLE WITHOUT THE WRITTEN PERMISSION OF THE U.S. NAVAL RESEARCH LABORATORY IS PROHIBITED.
NEXT ASSY
USED ON
APPLICATION
UNLESS OTHERWISE SPECIFIED:
DIMENSIONS ARE IN INCHES
TOLERANCES:
FRACTIONAL ±1/64
ANGULAR: MACH ±1°
TWO PLACE DECIMAL ±.02
THREE PLACE DECIMAL ±.005
FOUR PLACE DECIMAL ±.0005
INTERPRET GEOMETRIC TOLERANCING PER:
MATERIAL OFE Copper
FINISH
DRAWN
DATE 02-08-12
NAME S ALBRIGHT
CHECKED
ENG APPR.
MFG APPR.
Q.A.
COMMENTS:
NAVAL RESEARCH LABORATORY
VACUUM ELECTRONICS BRANCH
WASHINGTON,DC 20375-5000
TITLE:
Output Cavity Plate 0
SIZE B
DWG. NO. 120164
REV
SCALE:2:1
WEIGHT: 0.01
SHEET 1 OF 1

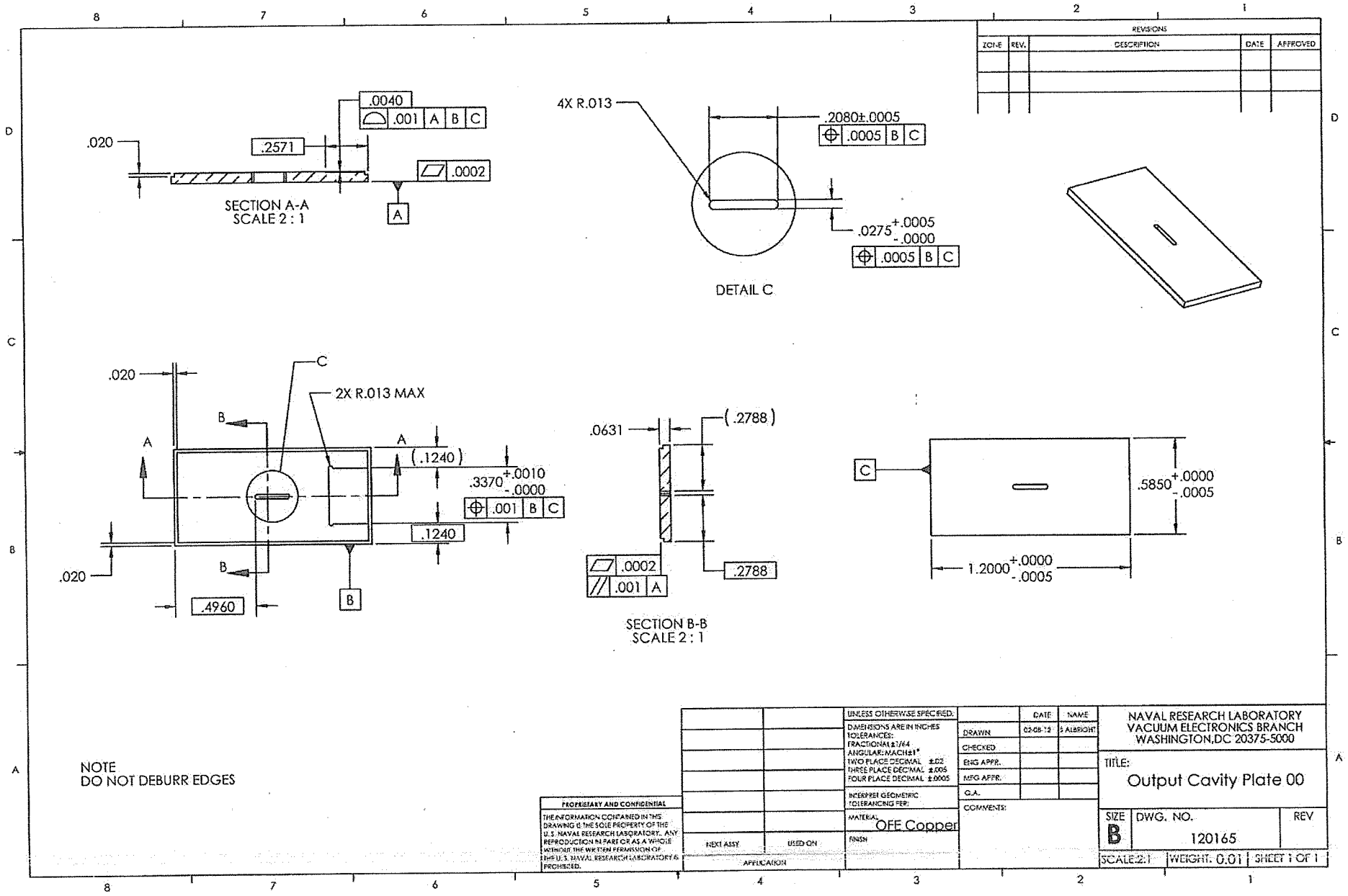
REVISIONS
ZONE
REV.
DESCRIPTION
DATE
APPROVED
.020
.2571
.0040
.001 A B C
.0002
A
SECTION A-A
SCALE 2 : 1
4X R.013
.2080±.0005
.0005 B C
.0275 +.0005 -.0000
.0005 B C
DETAIL C
.020
C
2X R.013 MAX
B
A
A
(.1240)
.3370 +.0010 -.0000
.001 B C
.1240
.020
B
B
.4960
.0631
(.2788)
.0002
.001 A
.2788
SECTION B-B
SCALE 2 : 1
C
.5850 +.0000 -.0005
1.2000 +.0000 -.0005
NOTE
DO NOT DEBURR EDGES
PROPRIETARY AND CONFIDENTIAL
THE INFORMATION CONTAINED IN THIS DRAWING IS THE SOLE PROPERTY OF THE U.S. NAVAL RESEARCH LABORATORY. ANY REPRODUCTION IN PART OR AS A WHOLE WITHOUT THE WRITTEN PERMISSION OF THE U.S. NAVAL RESEARCH LABORATORY IS PROHIBITED.
NEXT ASSY
USED ON
APPLICATION
UNLESS OTHERWISE SPECIFIED:
DIMENSIONS ARE IN INCHES
TOLERANCES:
FRACTIONAL ±1/64
ANGULAR: MACH ±1°
TWO PLACE DECIMAL ±.02
THREE PLACE DECIMAL ±.005
FOUR PLACE DECIMAL ±.0005
INTERPRET GEOMETRIC TOLERANCING PER:
MATERIAL
OFE Copper
FINISH
DRAWN
CHECKED
ENG APPR.
MFG APPR.
Q.A.
COMMENTS:
DATE
NAME
02-08-12
S ALBRIGHT
NAVAL RESEARCH LABORATORY
VACUUM ELECTRONICS BRANCH
WASHINGTON,DC 20375-5000
TITLE:
Output Cavity Plate 00
SIZE
B
DWG. NO.
120165
REV
SCALE:2:1
WEIGHT: 0.01
SHEET 1 OF 1