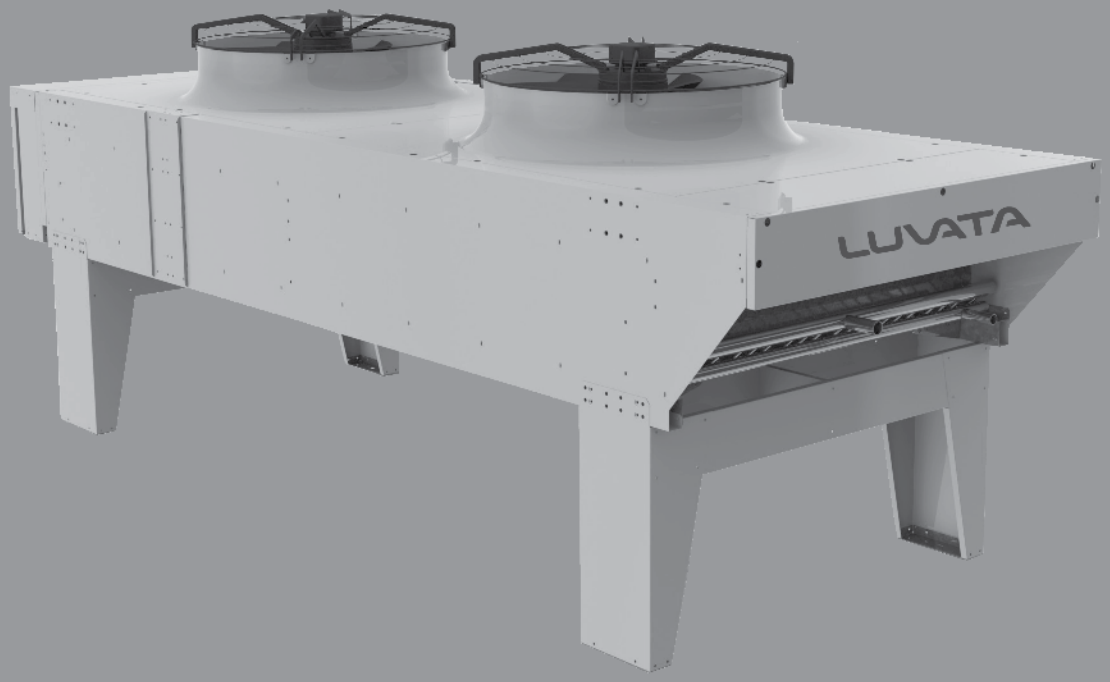

Air Cooled Fluid Coolers

Operation and Installation Manual

LUVATA

Partnerships beyond metals

General Safety Information

Installation and maintenance are to be performed only by qualified personnel who are familiar with local codes and regulations, and are experienced with this type of equipment.

Avoid contact with sharp edges and coil surfaces. They are a potential injury hazard.

This equipment may contain a substance that harms public health and the environment. Draining certain fluids to the environment is illegal. Fluid recovery devices must be used when installing or servicing this equipment. Consult local codes for requirements at your location.

WARNING: There may be more than one source of electrical power supplied to this unit. Do not service before disconnecting all power sources.

Inspection

Check all items received against the bill of lading. The shipping receipt should not be signed until all items listed on the bill of lading are accounted for or noted on the shipping documents.

Damaged material is the responsibility of the freight carrier and should not be returned to the manufacturer without prior approval. Carefully inspect all items for damage and immediately file a claim with the carrier.

Verify that the available electrical power supply is consistent with the voltage listed on the equipment nameplate.

- Power supply for 208/230 volt motors must be between 188 and 253 volts.
- Power supply for other motor voltages must be within +/- 10% of nameplate voltage.
- Phase imbalance must not exceed 2%.

Unit Location

The equipment is designed for outdoor installation and may be mounted on a roof or concrete slab. The units should be mounted level on roofs, slabs and/or structural supports that are sufficiently strong to support the total equipment operating weight. Consult with a professional engineer to determine safe mounting loads.

Unrestricted airflow must be provided to each fan section of the equipment. The unit should be located far enough away from any wall or other obstruction to provide adequate clearance for ambient air inlet and discharge. Care must also be taken to avoid air recirculation from other nearby equipment. See Figure 1 for recommendations. Do not attach ductwork to the coil inlet or outlet. Locate the unit away from building air intakes and heat sources such as vents and exhaust fans.

A corrosive environment, whether it comes from the jobsite or from another nearby source, will significantly shorten the service life of the coil and may require an appropriate coil coating or copper fins to extend the life of the unit.

Equipment should be located away from occupied spaces to reduce the transmission of objectionable sound and/or vibration. Piping should be sufficiently flexible to prevent transmission of noise and vibration into the building. Use isolation hangers to support fluid lines.

The unit must be secured in its final location. Holes are provided in the mounting legs for this purpose.

Figure 1: Space and Location Requirements

Note: Consideration should be given to allow ample space for maintenance work.

Walls or Obstructions

All sides of the unit should be a minimum of one overall unit width "W" away from any wall or barrier.

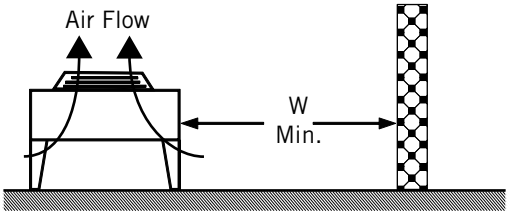

Multiple Units

For units placed side by side, the minimum distance between the units is the overall width of the largest unit. If the units are placed end to end, the minimum distance between the units is 5 feet.

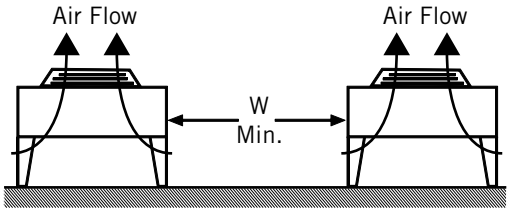

Decorative Fences

Fences must have 50% free area, with 1 foot of bottom clearance, and must not extend higher than the top of the unit. Units should be a minimum of one overall width "W" away from the fence.

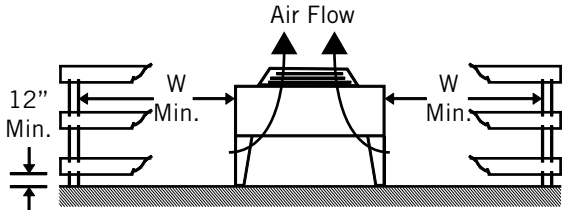

Units in Pits

The top of the unit must be level with, or higher than, the top of the pit. All sides of the unit should be a minimum of two overall unit widths "2W" away from any wall of the pit.

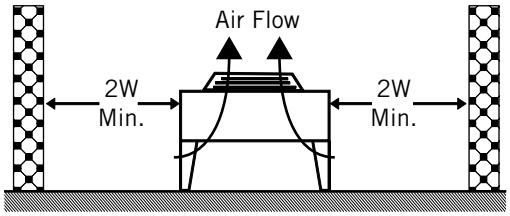

Rigging Instructions

The equipment is designed to be lifted only by the lifting lugs installed on the unit. Use all available lifting lugs when rigging the unit. Always use a spreader bar that is at least as long as the distance between the furthest lifting lugs. See Figure 2 for recommended rigging and lifting procedure.

Under no circumstances should the coil headers, return bends, or electrical box be used to lift or move this equipment.

It is most convenient to install the unit mounting leg assemblies when the unit is in the horizontal position (fans facing upward) and supported by the rigging.

The longer lifting lugs on one side of the unit (top side on shipping pallet) may be used temporarily to lift the unit off of the shipping pallet and lay horizontally on the ground.

Figure 2 - Rigging Method

Use all available lifting lugs.
Always use spreader bar.

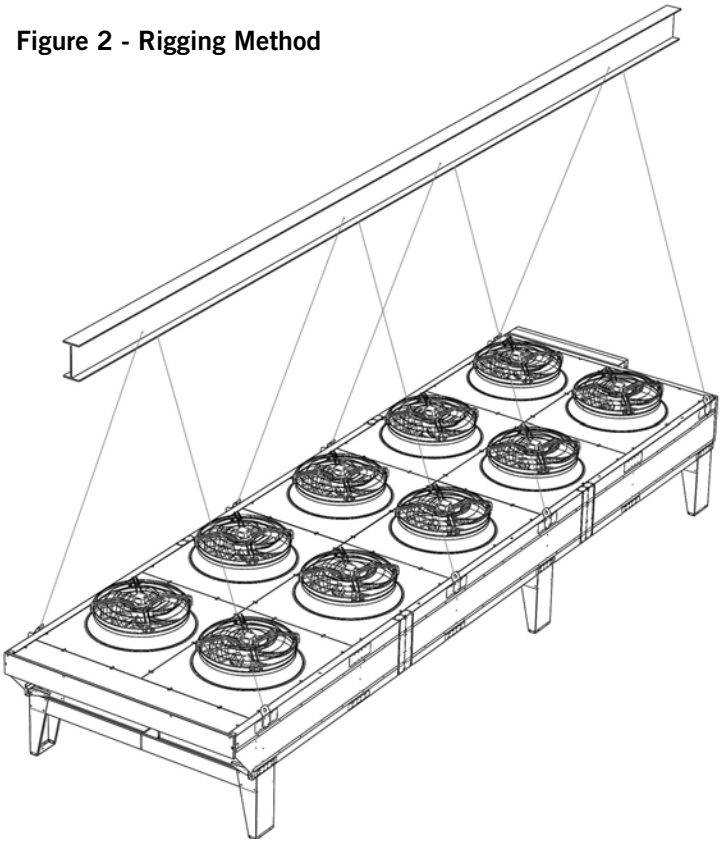

Approximate Net Weights (Dry)

800mm Single Wide Units		
# Fans	Weight (lbs.)	# Lifting Lugs
1	550	4
2	870	4
3	1250	4
4	1575	4
5	1750	8
6	2100	10
7	2400	10

800mm Double Wide Units		
# Fans	Weight (lbs.)	# Lifting Lugs
4	1620	4
6	2200	4
8	3000	4
10	3880	8
12	5100	10
14	6000	10

500mm Double Wide Units			
# Fans	Width (in.)	Weight (lbs.)	# Lifting Lugs
1	28.3	220	4
1	37.3	260	4
2	28.3	330	4
2	37.3	390	4
3	37.3	510	4

Unit Assembly and Installation

The leg assemblies are shipped with the unit but not installed. All installation hardware is included with the leg assemblies. Install all supplied leg assemblies to the unit as shown in Figure 3. This is best accomplished while the unit is in the horizontal position on the rigging.

Once the unit is set on its permanent base, each leg should be securely fastened to the base. Mounting holes are provided in the bottom of each leg for this purpose (hardware is not included with the unit).

Figure 3 - Mounting Leg Installation

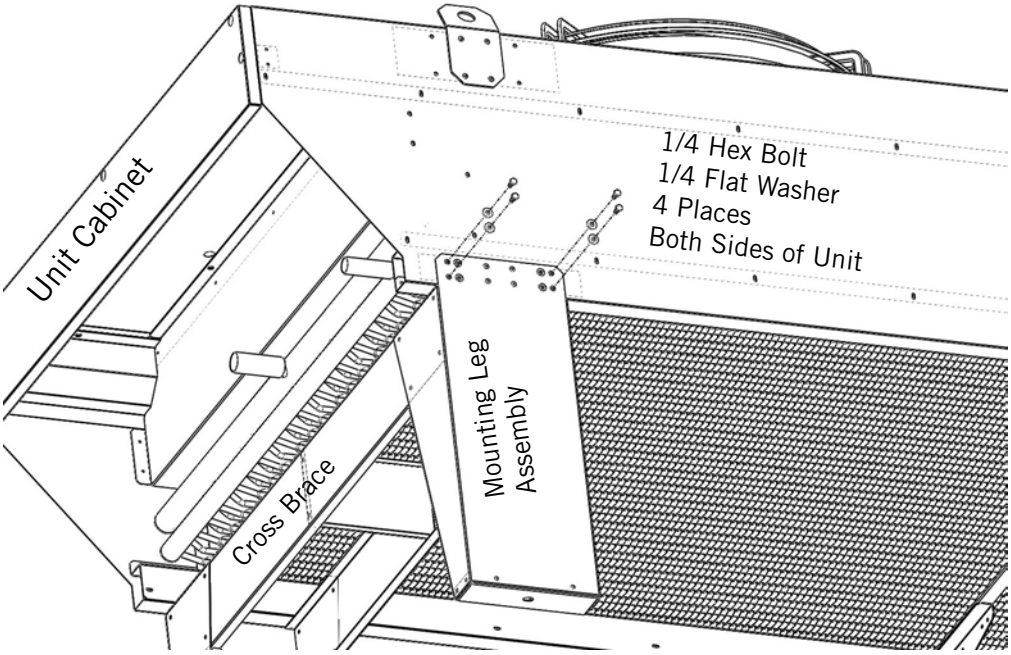

Piping Installation

Fluid piping must be installed by qualified technicians in accordance with local codes. Proper sizing of piping, fittings and valves are critical to fluid pump life, energy consumption, and operating costs. See Figure 4 for water pressure loss in piping with flow rates commonly used with a fluid cooler. The additional pressure loss through the fluid cooler must also be taken into account.

Sufficient valves and unions should be provided in the system to allow easy removal of components for repair or replacement. Where city water is required for make-up, local plumbing codes must be followed regarding disconnection requirements.

System piping must be complete with an expansion tank, purge valve, relief valve and fill point for glycol. Vent valves are provided in the inlet headers of the fluid cooler. Where system piping rises above the liquid header, additional vent valves are required to be installed at the highest point in the system piping to allow bleeding of air when filling the system. See Figure 5 for typical fluid cooler piping.

Piping installation should provide for maximum leak prevention. Weld or sweat joints should be used wherever possible, otherwise use tightly connected threaded pipe joints sealed with Teflon tape. Glycol solutions have a greater propensity to leak than water and must be taken into account.

After fluid piping is completed, all joints should be thoroughly leak tested prior to filling the system.

Figure 4 - Pressure Loss in Feet of Water

Water Flow Rate (GPM)	Schedule 40 Steel Pipe		Type L Copper Tube	
	Nom. Pipe Diameter (In.)	Head/100 Ft. Equiv. Length (Ft. H20)	Outside Diameter (In.)	Head/100Ft. Equiv. Length (Ft. H20)
15	1	17.6	1 1/8	15.0
20	1	30.2	1 1/8	23.1
25	1	---	1 1/8	34.6
25	1 1/4	11.5	1 3/8	12.6
30	1 1/4	16.3	1 3/8	17.4
35	1 1/4	21.8	1 3/8	23.0
40	---	---	1 3/8	26.3
40	1 1/2	13.0	1 5/8	12.9
45	1 1/2	16.5	1 5/8	15.7
60	---	---	1 5/8	26.3
60	2	7.9	2 1/8	7.0
80	2	13.7	2 1/8	12.0
100	2 1/2	8.5	2 5/8	6.1
150	2 1/2	18.6	2 5/8	12.9
200	3	10.7	3 1/8	9.1
250	3	16.5	3 1/8	13.7
300	3 1/2	11.1	3 5/8	9.2
300	4	5.9	4 1/8	4.9
350	4	7.9	4 1/8	6.5
400	4	10.2	4 1/8	8.2

Glycol Systems

Glycol is commonly used in fluid coolers to prevent freezing of the fluid that would otherwise result in significant damage to the fluid cooler and other system components. The amount of glycol added to the system depends on the total volume of fluid in the system and the percentage of glycol, by volume, required to provide adequate freeze protection at the minimum ambient design temperature. See Figure 6 for guidelines.

Glycol system piping does not require insulation except where fluid temperature will be below ambient dew point temperature.

Glycol mixtures have a higher density than water, but a lower specific heat. This will result in a higher flow rate, but a lower heat transfer capacity than water. This must be taken into account when adding glycol to a system designed for water.

Never use a pressure reducing valve in a glycol system. A slight leak will dilute the mixture and reduce freeze protection. Any system refilling must be controlled so as to maintain the proper glycol to water ratio.

Glycol and water must be thoroughly pre-mixed to the desired strength prior to adding it to the system. Pre-mixing is necessary to release the oxygen created by the chemical reaction between glycol and water that would otherwise lead to improper system operation.

Glycol systems are susceptible to sludge formation from a variety of sources. As a result, good system design and installation requires the following precautions:

- Never use galvanized piping.
- Thoroughly clean and flush the entire system with a warm trisodium phosphate solution before filling.
- Chromate inhibitors must not be used.
- Contract with the glycol manufacturer to provide regular inhibitor evaluation services.

Figure 5 - Typical Fluid Cooler Piping

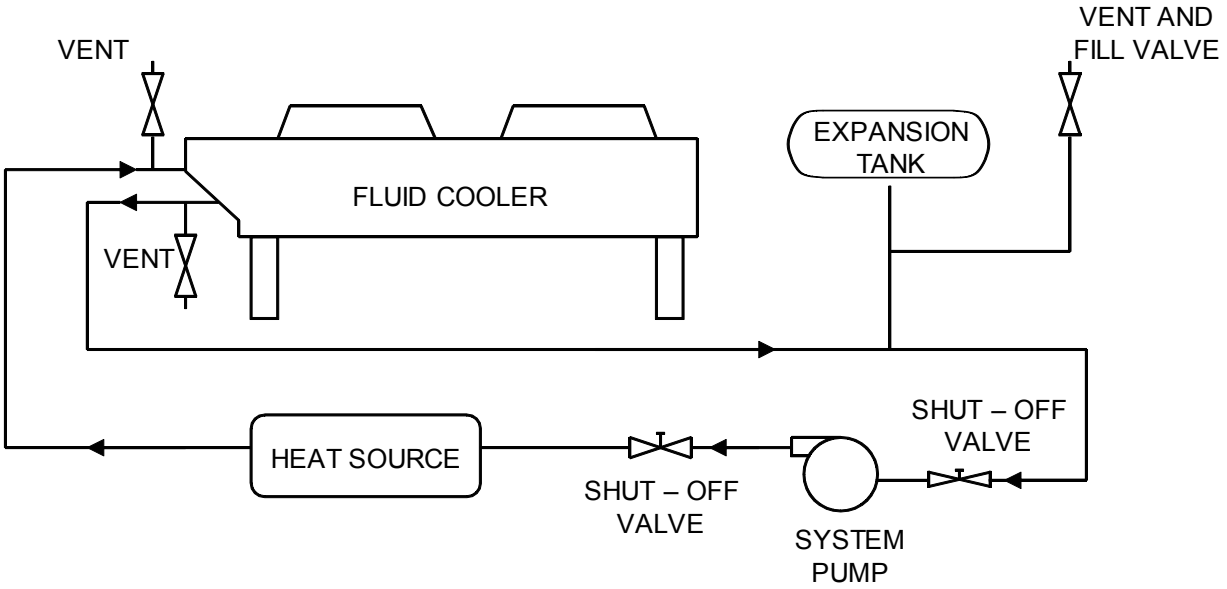

Figure 6 - Freezing Point for Various Glycol Concentrations (F)

% Glycol by Volume	20%	25%	30%	35%	40%	45%	50%
Propylene	+19	+14	+9	+2	-6	-16	-28
Ethylene	+16	+10	+4	-3	-12	-22	-34

Fluid Circulating Pump

Mechanical seal type pumps must always be used with glycol systems and are recommended for all fluid cooler applications. Pumps are sized to provide the desired flow rate at the total pressure loss through the entire fluid system. In a closed fluid system, no allowance is made for vertical lift.

Parallel pumps in continuous operation are recommended for redundancy and temporary, partial system operation in the event one fails.

Electrical Wiring

The unit is equipped with an electrical power disconnect switch that must be turned off before any electrical work is performed on the unit. Electric installation and maintenance should be performed only by a qualified electrician and in accordance with the National Electrical Code, local codes and regulations. Proper overcurrent protection should be provided for all fan motors.

WARNING: There may be more than one source of electrical current to this unit. Do not service before disconnecting all power supplies.

Power supply voltage, phase, and frequency must match specifications shown on the unit nameplate. Always check motors for proper rotation. Standard 1 and 3 phase motors contain an internal thermal overload protection (TOP) switch that must be wired to the motor contactor holding coil to properly protect the motor from overheating (see wiring diagram for proper installation). The TOP is limited to 1.6 amps maximum inrush current. For 115 and 230 VAC control circuits, a motor contactor holding coil with 60 VA maximum inrush current is recommended. For 24 VAC control circuits, a motor contactor holding coil with 12 VA maximum inrush current, or use of a pilot relay, is recommended.

Standard 3 phase motors are dual voltage and may be quickly converted in the field by repositioning the jumpers at the motor terminal block (See Figure 7).

Variable speed EC motors are single voltage and contain internal overload protection, under voltage protection, and phase imbalance protection. These motors do not require the use of a contactor.

Electrical leads from each motor terminate at a common terminal block in the electrical panel. Where fan cycle controls are furnished and factory installed, the motors and TOPs are completely wired to the contactors and control circuits (See Figure 8). The motors should be checked for proper voltage and rotation.

Figure 7 - Motor Terminal Block Arrangements

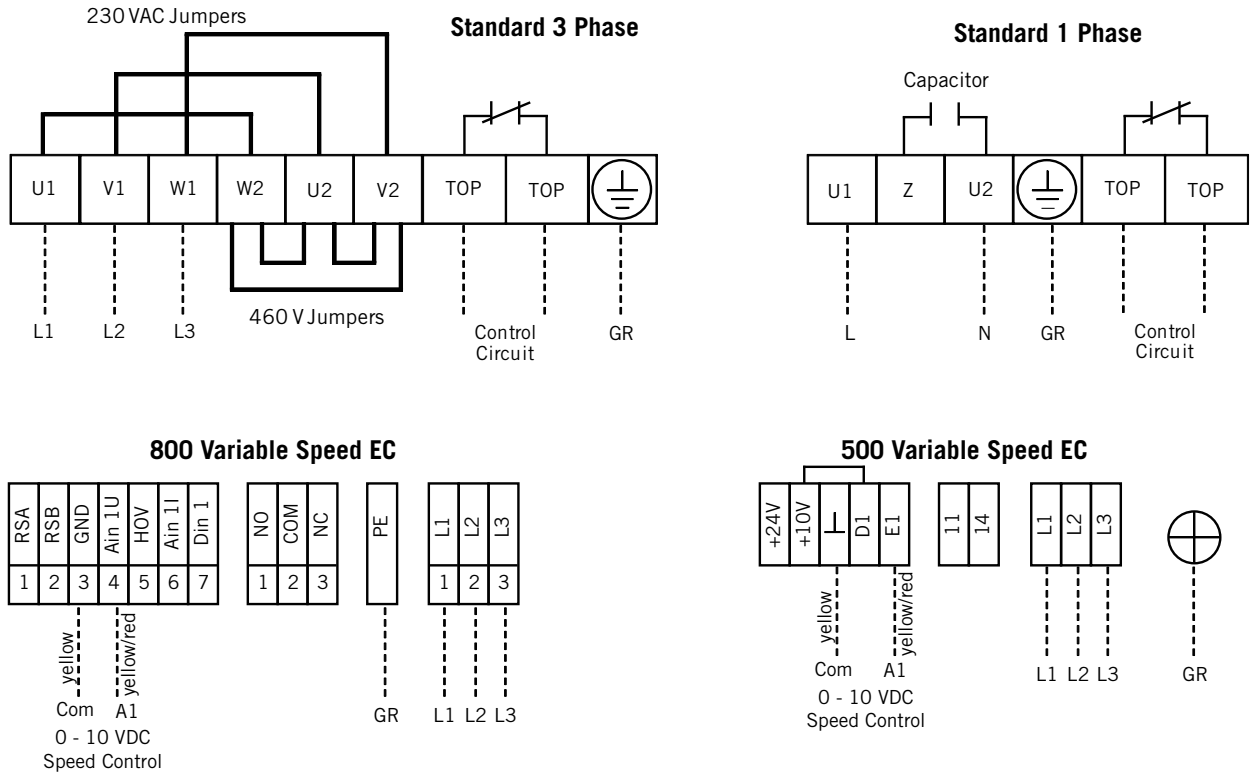

To assure a long service life of the fan motors, it is essential that the motor terminal box covers, conduits, and conduit connectors be properly installed. Each of these components are supplied with seals and gaskets that will keep the motor wiring and connections dry when maintained in good condition. If a seal or gasket is damaged, replace it immediately. The use of caulk or other sealants is not an acceptable means of repairing these components!

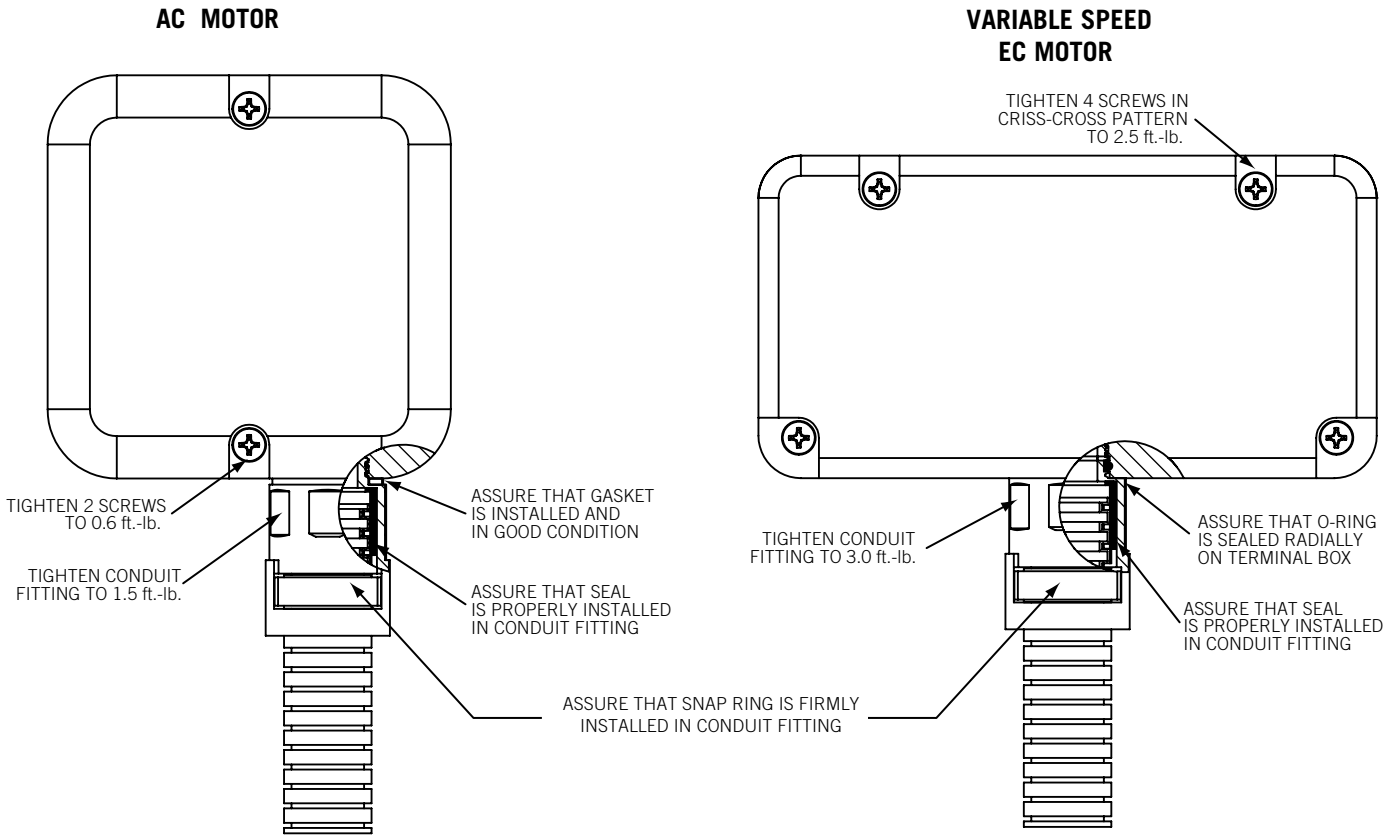

Figure 8A - Typical Wiring Diagram with Individual Contactors

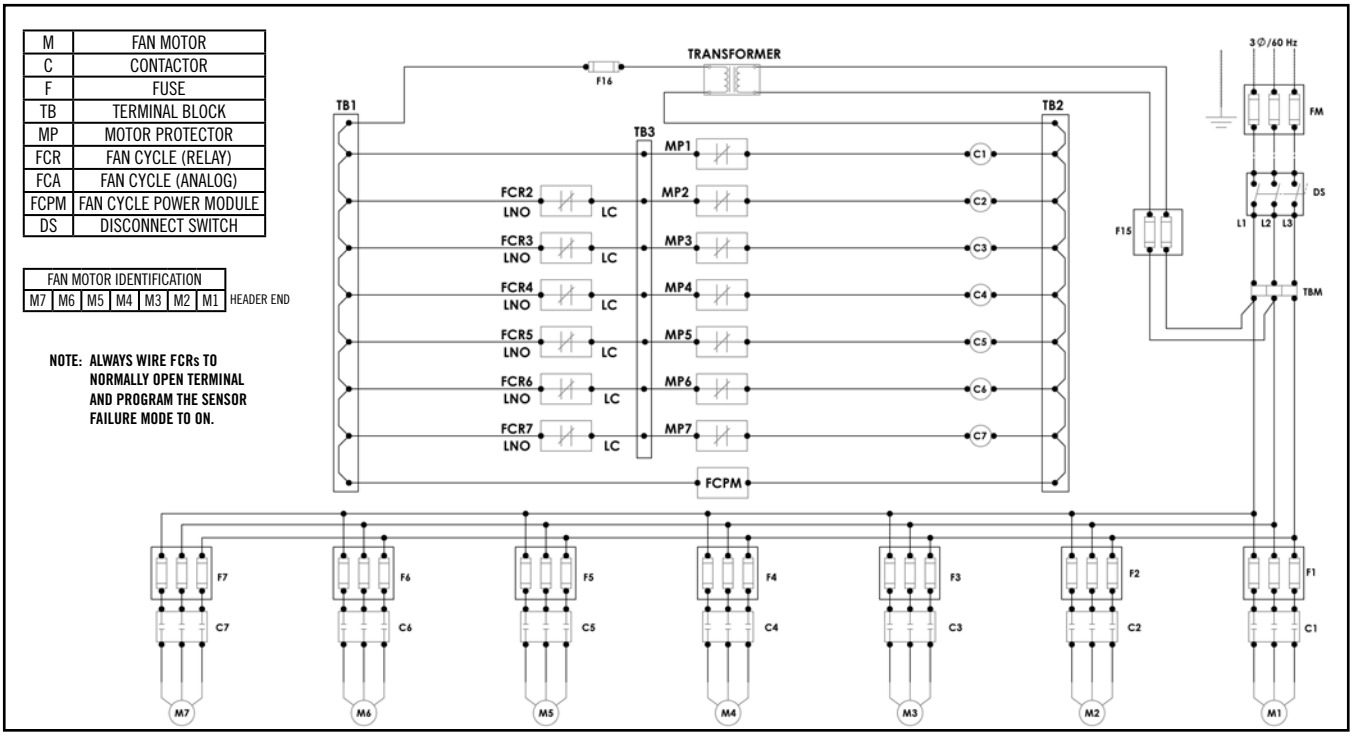

Figure 8B - Typical Wiring Diagram with Paired Motor Contactors

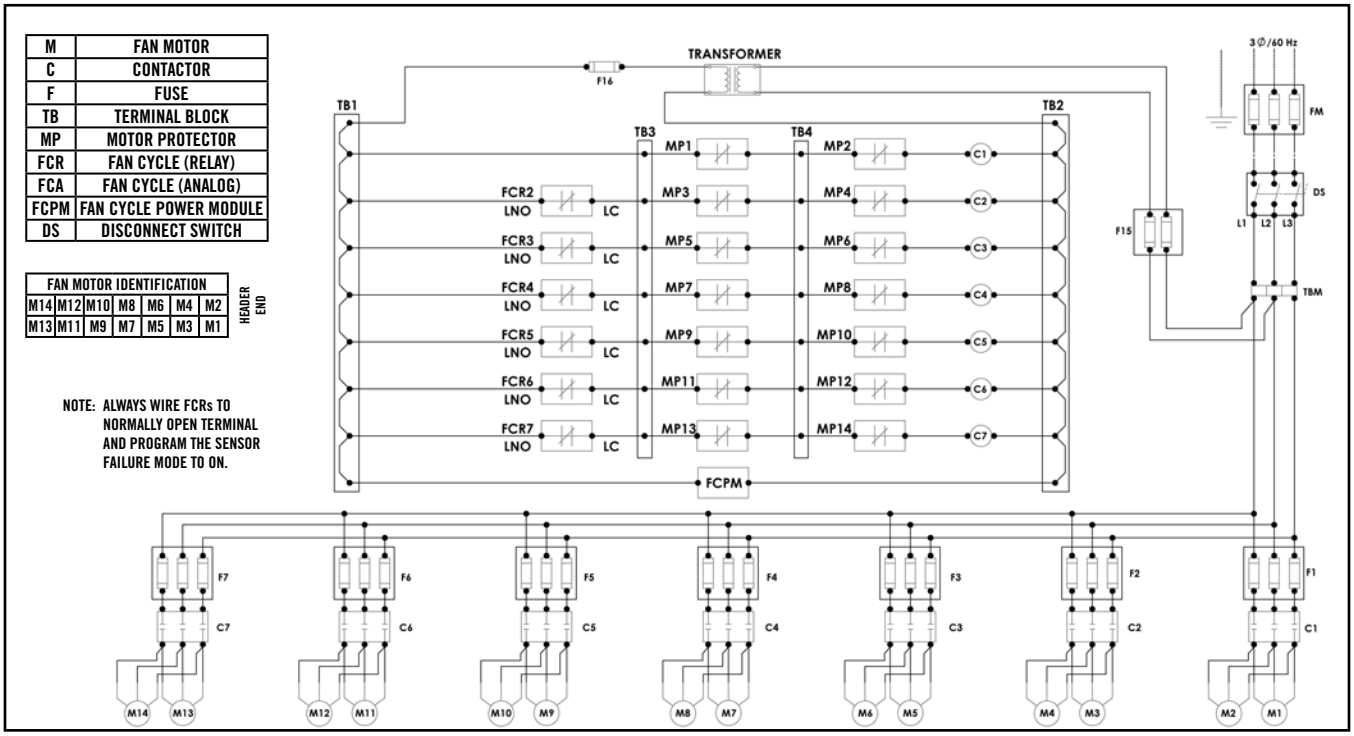

Figure 8C - Typical Wiring Diagram with Variable Speed Header Fans

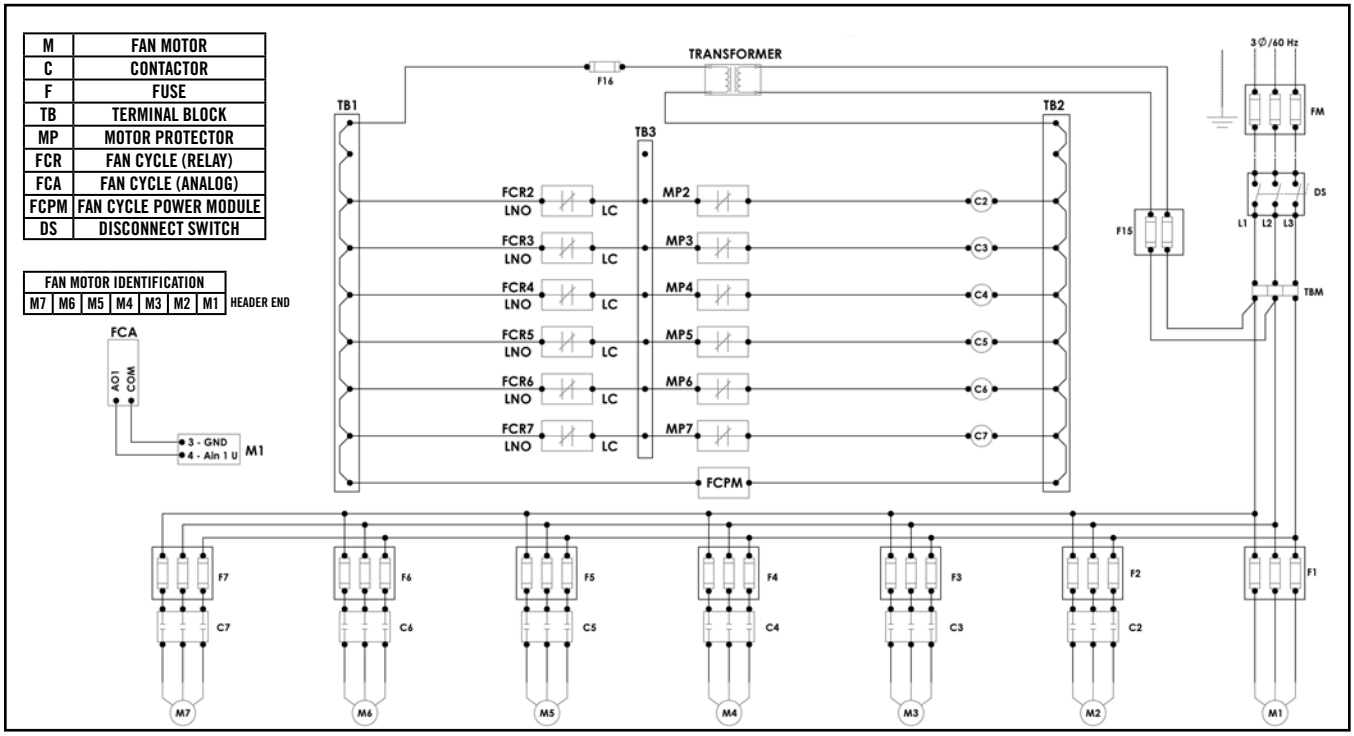

Figure 8D - Typical Wiring Diagram with VSEC Fan Motors

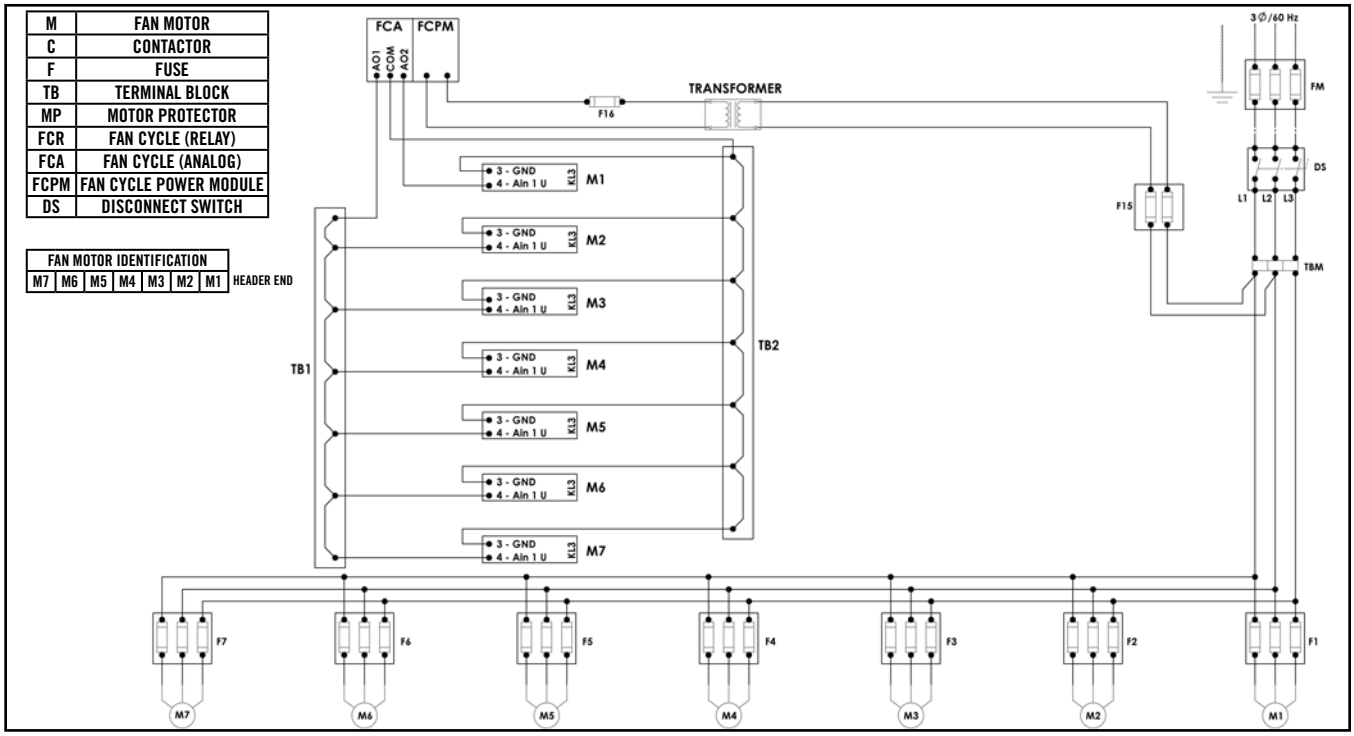

Figure 9 - Control Circuit Transformer Wiring

Factory supplied control circuit transformers for 208-230 volt models are factory wired for 230 volt primary supply voltage. If actual supply voltage is 208 volts, move wire from terminal H3 to terminal H2 on the primary side of the transformer (see Figure 9).

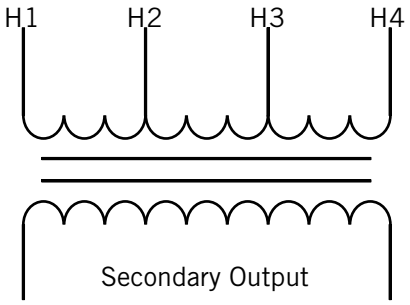

Primary Input	
Voltage	**Terminals**
208	H1 & H2
230	H1 & H3
460	H1 & H4

Fan Cycling

Cycling fluid cooler fans on and off provides an automatic means of maintaining leaving fluid temperature closer to an established set point when loads and/or ambient temperatures fluctuate. Fan cycling controls are activated by a temperature sensor located at the leaving fluid header.

When fan cycling is ordered from the factory, the temperature sensor is shipped loose in the electrical panel and must be field installed prior to system start-up. The temperature sensor should be clamped snuggly to the leaving fluid line as close to the header as possible at the 3 or 9 o'clock position. It is essential that temperature sensor head be well insulated against the fluid line. The temperature sensor is then wired to the provided fan cycle controller as shown below:

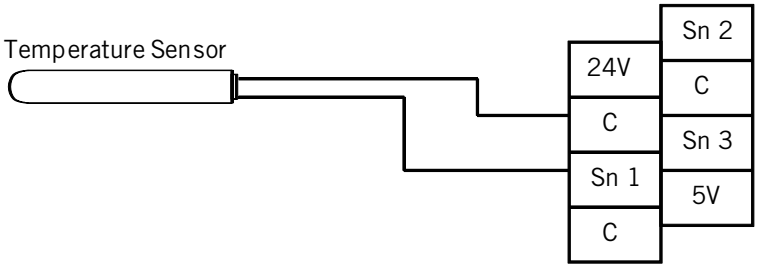

With any type of fan cycle control, great care must be taken by the installer in making adjustments to prevent short cycling of the fans. Any fan cycle shorter than 3 minutes is considered excessive and can be detrimental to the system performance and life cycle. Short cycling is most often caused by setting the differential or set points on the controller too close. Recommended differential settings are 5°F minimum. Figure 10 provides guidelines for control settings. All systems and operating conditions vary and the controls may require further refinement of these settings in the field to provide optimum system performance and prevent short cycling.

The fan, or set of fans for a double wide unit, closest to the headers should never be cycled off. They should operate continuously whenever the system pump is turned on. Always set the header fan(s) to be the first on and last off. Never cycle more than one fan at a time on single wide units. Never cycle more than 2 adjacent fans at a time on double wide units.

Figure 10 - Fan Cycling Control Settings (Temperature (F) above/below set point)

Header End	M1	M3		M5		M7		M9		M11		M13	
	M2	M4		M6		M8		M10		M12		M14	
Stage	---	1		2		3		4		5		6	
Contactor	C1	C2		C3		C4		C5		C6		C7	
# Fans Long	Always On	On	Off	On	Off	On	Off	On	Off	On	Off	On	Off
Temperature Control (°F)													
2		+5	-5										
3		+5	-5	+10	0								
4		+5	-5	+10	0	+15	+5						
5		+5	-5	+10	0	+15	+5	+20	+10				
6		+5	-5	+10	0	+15	+5	+20	+10	+25	+15		
7		+5	-5	+10	0	+15	+5	+20	+10	+25	+15	+30	+20

Variable Speed EC Fan Motors (VSEC)

VSEC fan motors offer the opportunity for ultra-high efficiency, extremely quiet operation and precise leaving fluid temperature control. These three phase motors will operate in the range of 10% to 100% of full speed in response to a 1 to 10 VDC proportional signal supplied by a temperature sensor and speed controller. Leaving fluid temperature is controlled by speeding up and slowing down the fans causing airflow across the coil to increase and decrease.

Luvata VSEC fan motors are controlled under the following specifications:

	800mm Fans	500mm Fans
motor turns off	< 1.0 VDC	< 0.8 VDC
motor operates at 10% of full speed	1.0 VDC	1.0 VDC
motor restarts after falling below minimum voltage	> 1.5 VDC	> 1.1 VDC
motor operates at 100% of full speed	10.0 VDC	10.0 VDC

Header fans should never be allowed to turn off any time a system pump is running. It is recommended that header fans always receive a minimum control voltage of 1.1 VDC. Downstream fan motors may be allowed to cycle off by allowing the control voltage to drop below 0.8 VDC.

VSEC Header Fan Control

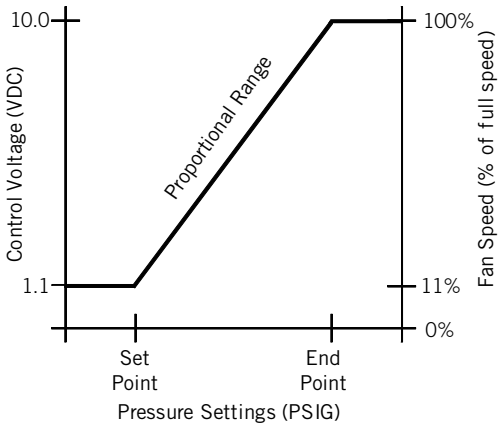

VSEC Non-Header Fan Control

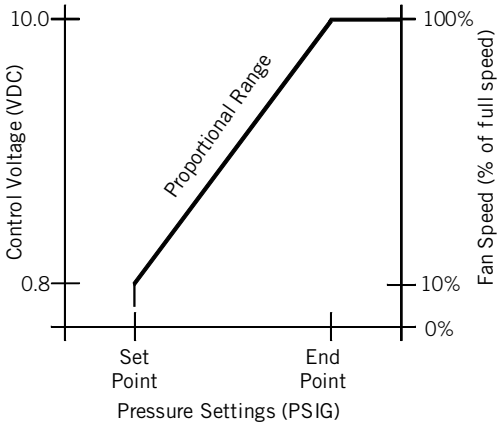

LFV models are equipped with all VSEC fan motors. All fans are ramped up and down in speed together. Header fans will always operate at a minimum of 11% of full speed while downstream fans are allowed to turn off.

LFS and LFU models are available with VSEC header fans where the remaining downstream fans are standard single speed fans that may be cycled on/off. As downstream fans cycle on/off, the VSEC header fans ramp up/down in speed to more precisely control leaving fluid temperature. Header fans will always operate at a minimum 11% of full speed.

Figure 11 - Speed Control Settings for VSEC Fans

	Header Fans		Downstream Fans	
	Set	End	Set	End
Degrees (F) above/below set point	0	+30	-5	+30

In addition to variable speed operation, Luvata VSEC fan motors include advanced technology features including inherent overheating protection, phase loss protection, over/under voltage protection and rotation correction.

WARNING : Variable speed EC fan motors may retain voltage even after power has been disconnected. Wait 5 minutes after disconnecting power before touching and conductors connected to variable speed EC fan motors.

Start-Up
Prior to start-up the following items should be checked:
- Fans rotate freely.
- Motors and mounts are securely fastened.
- Legs are securely attached to the unit and to the mounting structure.
- Remove debris from around the unit that could potentially block airflow through the coil.
- Assure that water has been completely removed from the system. Flush entire system with pre-mixed fluid as needed to remove residual water.

Fill and purge the system:
- Thoroughly leak test the system prior to adding fluid.
- Thoroughly pre-mix glycol and water to the desired strength prior to filling the system.
- For roof mounted fluid coolers, pour pre-mixed fluid into the expansion tank and drain into the system until tank is half empty. Purge air from ALL vents. Run the system for one minute and purge air from ALL vents again. Refill the expansion tank with pre-mixed fluid and repeat prior steps until system is filled with fluid. Repeat purging air from the system after one hour of operation and then again after several hours of operation.
- For ground mounted fluid coolers, the pre-mixed fluid will need to be pumped into the system from the lowest accessible point. See Figure 12 for recommended setup of pump and filling tank. Close the shut off valve and open the two access valves. Pump the fluid mixture into the system at full pressure, allowing fluid and air to return to the tank through the drain line. The drain line valve should be partially closed to allow the system to build head pressure needed to force air out of the system. Once a steady flow of fluid, without air, is realized at the drain line the system is filled and purged. Close the 2 access valves and open the shut-off valve.

Upon start-up, check that fans are rotating in the proper direction – airflow should pass through the coil first, then through the fan and away from the unit.

Figures 12 - Pump Filling Set-Up

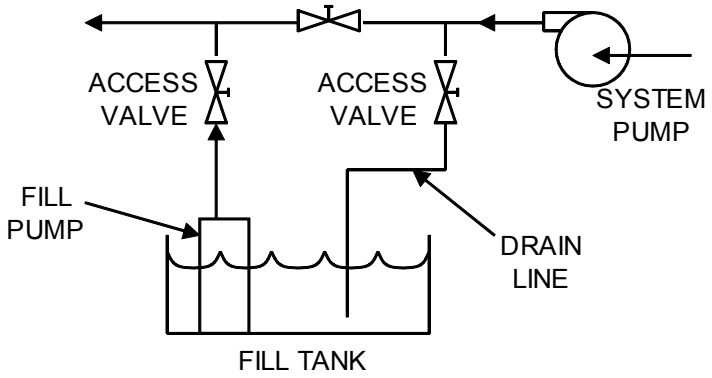

Maintenance

Air-cooled fluid coolers require little maintenance but regular performance of these items are critical for extended service life and peak performance. WARNING : Disconnect all power sources to the unit before performing any electrical work on the unit or working near the fans.

- Clean the coil fins every 6 months or more frequently in severe conditions. This may be accomplished brushing and vacuuming or by applying a commercially available coil cleaner specifically developed for cleaning copper and/or aluminum coils. Never use acid-based cleaners. Always follow label directions.
- Remove any debris trapped between the coil and fans.
- Comb bent coil fins.
- Tighten all electrical connections.
- Tighten fasteners connecting the motors to their mounts, motor mounts to the unit, legs to the unit and the mounting structure.

Service Replacement Parts

The fan, motor and guard are provided as a single assembly.

Models	RPM	Diameter (In.)	Voltage	Part Number
LCS5011-008/013/018	750	19.7	208-230/1/60	114979200
LCS5 All Other 1 Phase	1400	19.7	208-230/1/60	114979100
LCS5 All 3 Phase	1550	19.7	208-230-460/3/60	114979000
LCV5	VSEC	19.7	208-230/3/60	114979400
LCV5	VSEC	19.7	460/3/60	114979300
LCS8 All 3 Phase	1100	31.5	208-230-460/3/60	114699800
LCU8 All 3 Phase	500	31.5	208-230-460/3/60	114978700
LCV8	VSEC	31.5	208-230/3/60	114978900
LCV8	VSEC	31.5	460/3/60	114978800

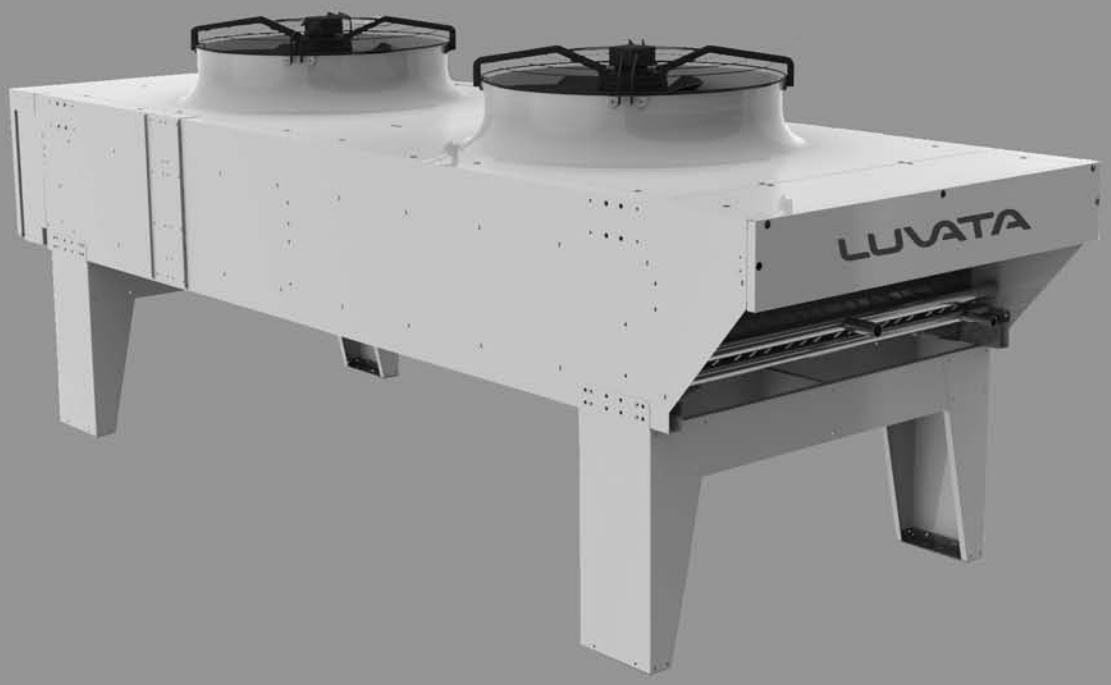

Luvata Grenada LLC
Commercial Refrigeration Products
PO Box 948 / 3984 Highway 51 South
Grenada, MS 38902-0948
Tel: 800-993-2579 / Fax: 662-229-2002
Email: comref@luvata.com
Web: www.luvata.com

Part # 116154300
Printed in the USA
June 2011